BLM-30

POINT NAME

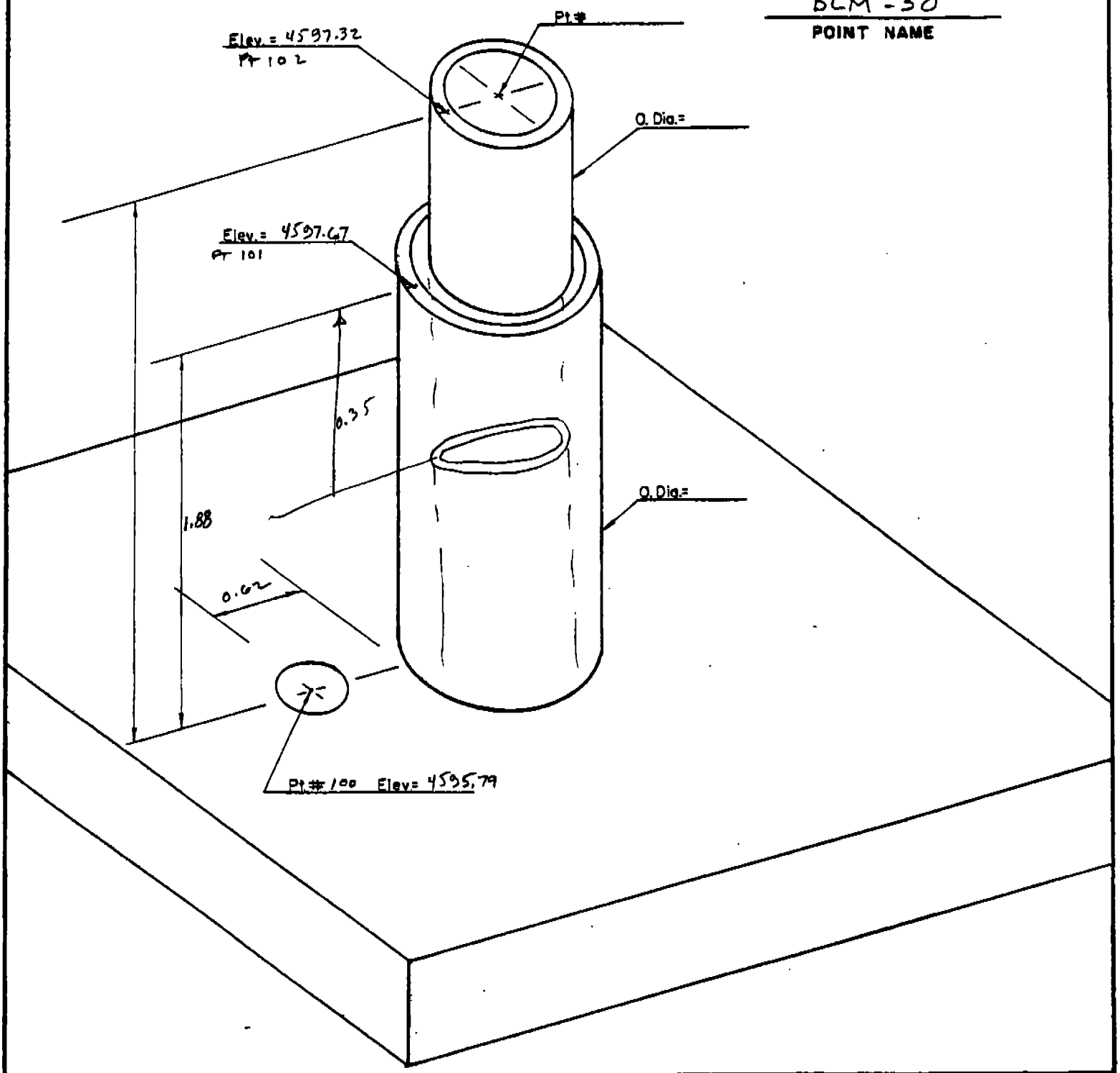

COORD. TYPE	POINT # 100	POINT # 101	POINT # 102	SCALE FACTOR	Δα
GEODETIC	LAT= 32°31'51.22937"	LAT= 32°31'51.22323"	LAT= 32°31'51.22175"	———	———
	LONG= 106°38'26.39835"	LONG= 106°38'26.39851"	LONG= 106°38'26.39855"	———	———
WSTM COORD.	X= 405,275.02	X= 405,275.01	X= 405,275.00	Scale= 0.9999 5275	(-)0°09'55"
	Y= 232,643.82	Y= 232,643.20	Y= 232,643.05	Grid = 0.9997 654	
NM COORD	X= 379,599.22	X= 379,599.20	X= 379,599.20	Scale = 0.9999 1660	(-)0°12'36"
	Y= 557,068.36	Y= 557,067.74	Y= 557,067.59	Grid = 0.9996 968	

NM COORDINATE ZONE CENTRAL NAD 27

BOTSFORD LAND SURVEYING, INC.
100 E. HADLEY AVE.
LAS CRUCES, NM 88001
Phone 526-2444