BLM 28

POINT NAME

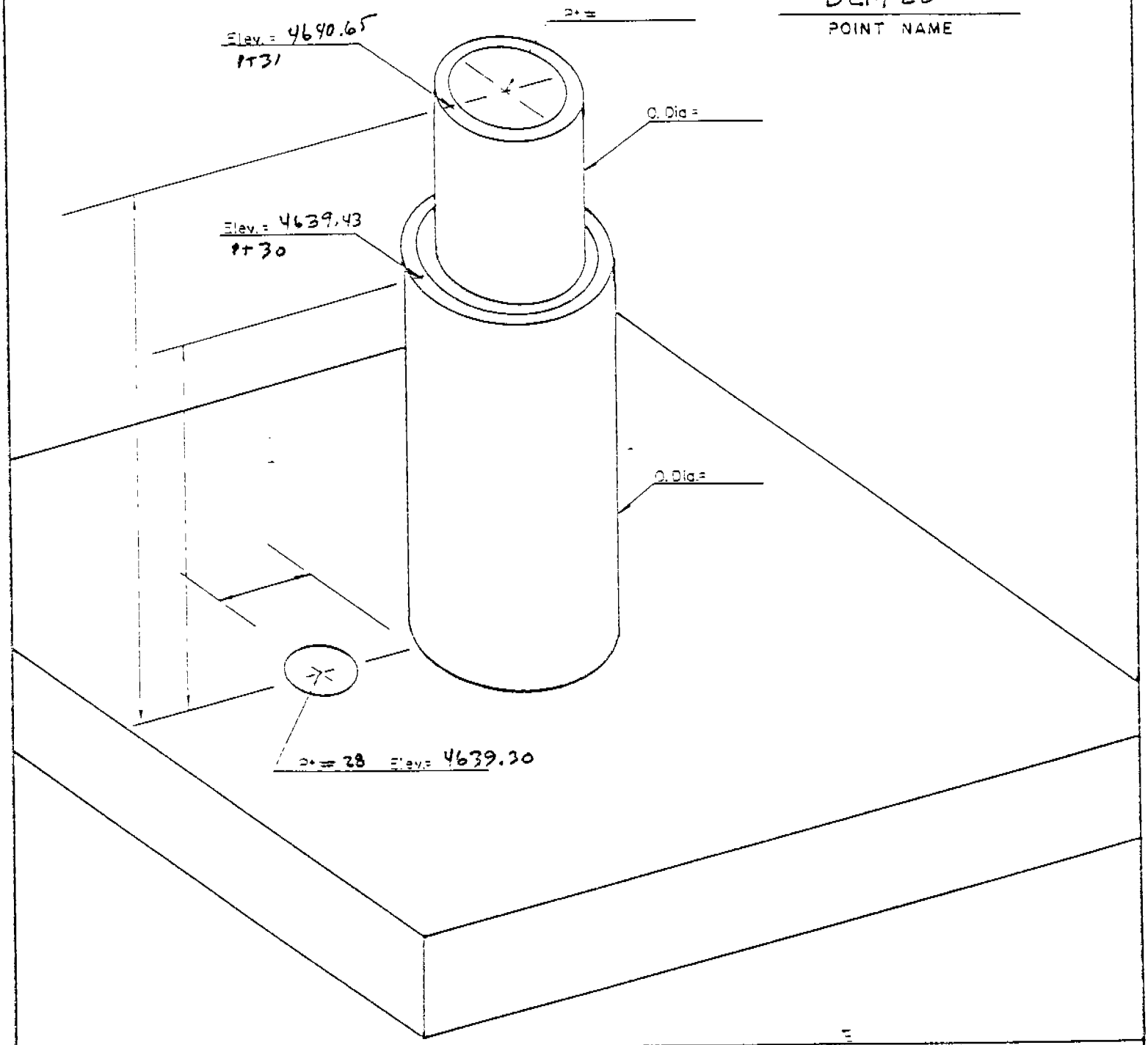

COORD. TYPE	POINT #	POINT # 30	POINT # 31	SCALE FACTOR	Δα
GEODETIC	LAT= 32°20'15.1409"	LAT= 32°20'15.13498"	LAT= 32°20'15.1335"	———	———
	LONG= 106°37'51.6967"	LONG= 106°37'51.69737"	LONG= 106°37'51.69754"	———	———
WSTM COORD.	X= 408,218.920	X= 408,218.858	X= 408,218.842	SCALE = 0.9999 846	(-) 0°09'36"
	Y= 222,924.775	Y= 222,924.178	Y= 222,924.029	Geo = 0.9997 628	
NM COORD.	X= 382,535.314	X= 332,535.251	X= 382,535.235	Sc. = 0.9999 158	(-) 0°12'17"
	Y= 547,347.684	Y= 547,347.087	Y= 547,346.938	Geo = 0.9998 940	

NM COORDINATE ZONE CENTRAL
NAD 27

BOTSFORD LAND SURVEYING, INC.
212 S. Downtown Mall
LAS CRUCES, NM 88001
Phone 526-2444