WB-9

POINT NAME

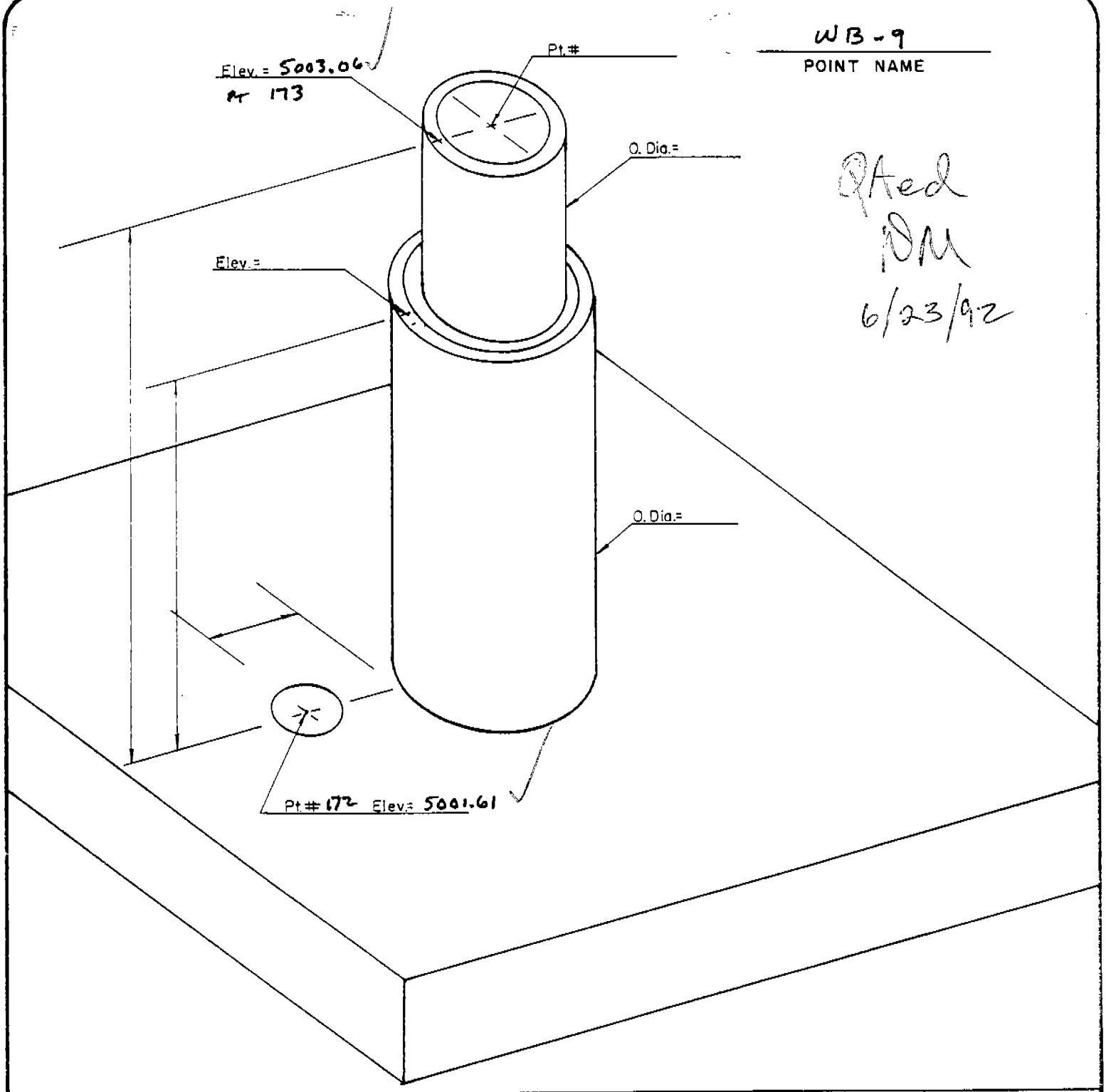

Qted
DM
6/23/92

COORD. TYPE	POINT # 172	POINT #	POINT # 173	SCALE FACTOR	Δα
GEODETIC	LAT= 32°29'23.388"	LAT=	LAT= 32°29'23.401"	———	———
	LONG= 106°35'51.247"	LONG=	LONG= 106°35'51.215"	———	———
WSTM COORD.	X= 418,523.957	X=	X= 418,524.197	SCALE= 0.9999826	(-) 0°08'30"
	Y= 217,667.517	Y=	Y= 217,668.866	GRID= 0.9997428	
NM COORD	X= 392,835.53	X=	X= 392,835.77	SCALE= 0.9999132	(-) 0°11'12"
	Y= 542,082.739	Y=	Y= 542,084.09	GRID= 0.9996740	

NM COORDINATE ZONE CENTRAL

BOTSFORD LAND SURVEYING, INC.
212 S. Downtown Mall
LAS CRUCES, NM 88001
Phone 526-2444