Well WB-5
POINT NAME

D. Menzie
5/15/91

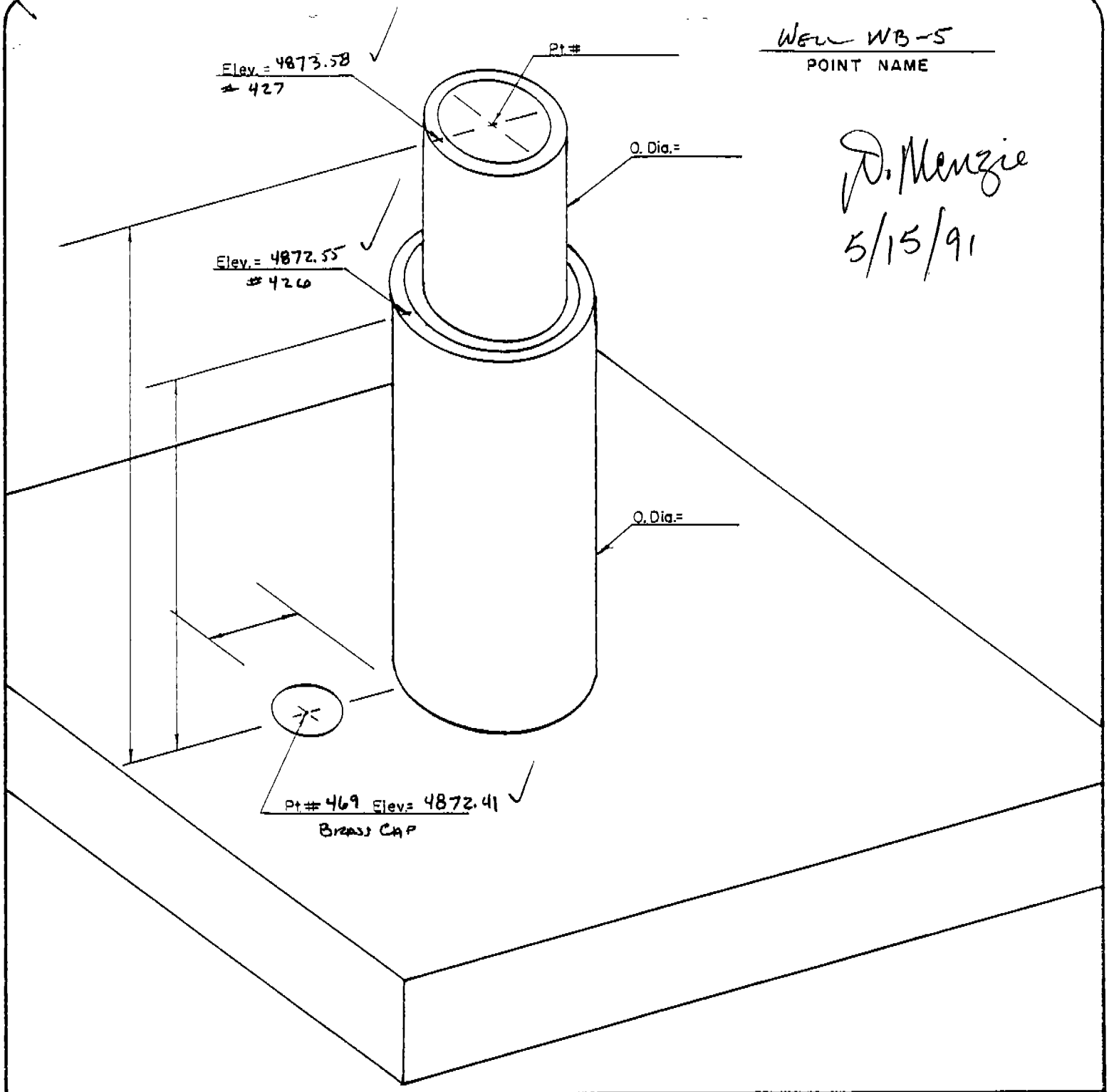

COORD. TYPE	POINT # 469	POINT # 426	POINT # 427	SCALE FACTOR	Δα
GEODETIC	LAT= 32°29' 56.886"	LAT= 32°29' 56.887"	LAT= 32°29' 56.887"	———	———
	LONG= 106°36' 12.479"	LONG= 106°36' 12.492"	LONG= 106°36' 12.492"	———	———
WSTM COORD.	X= 416,711.325	X= 416,710.210	X= 416,710.217	0.9999 829 Scale	(-) 0° 08' 43"
	Y= 221,057.351	Y= 221,057.454	Y= 221,057.435	0.9997 499 Grid	
NM COORD	X= 391,025.71	X= 391,024.60	X= 391,024.60	0.9999 136 Scale	
	Y= 545,473.736	Y= 545,473.84	Y= 545,473.82	0.9996 806 Grid	(-) 0° 11' 24"

NM COORDINATE ZONE CENTRAL

BOTSFORD LAND SURVEYING, INC.
212 S. Downtown Mall
LAS CRUCES, NM 88001
Phone 526-2444