WELL WB-2

POINT NAME

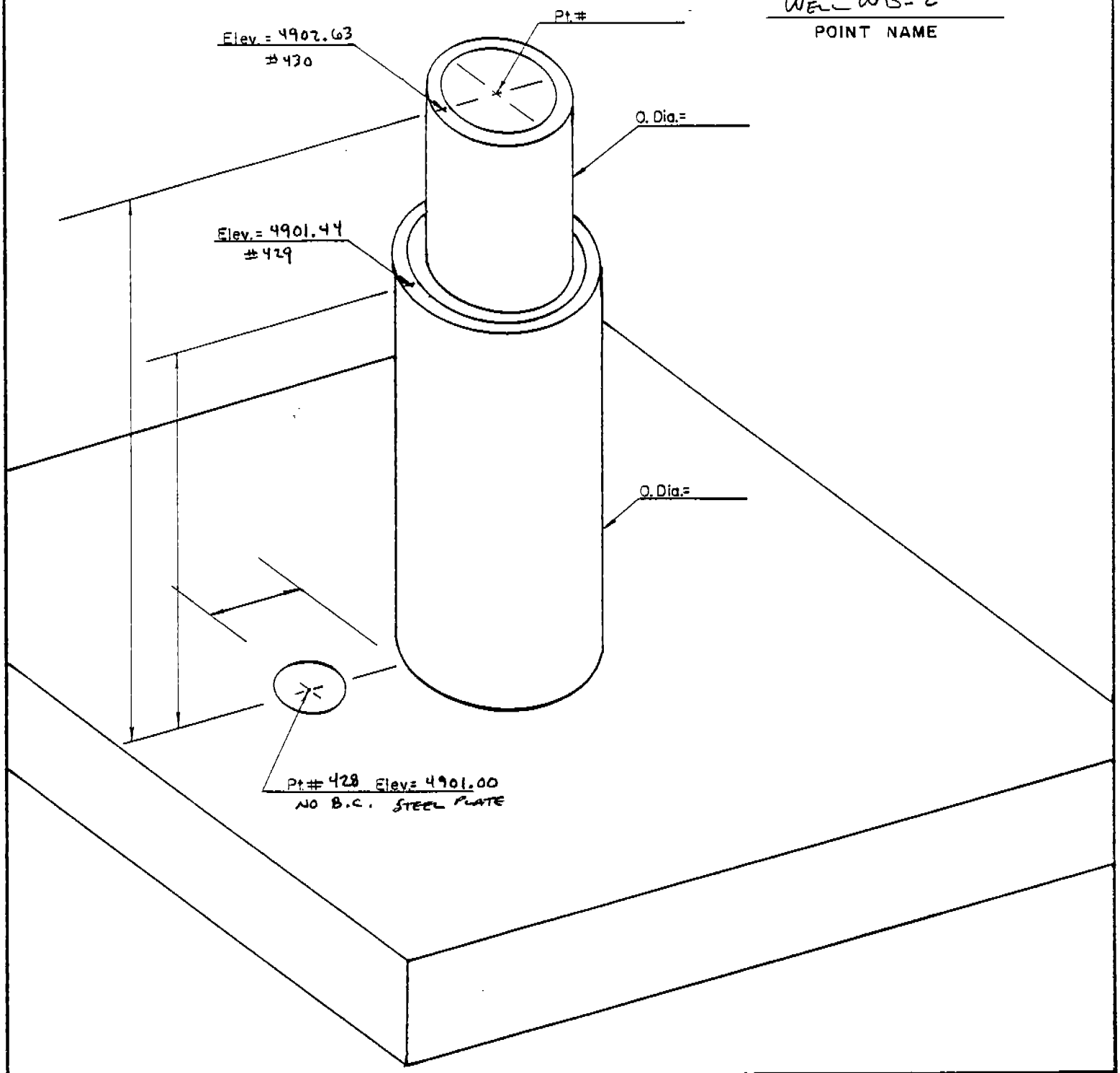

COORD. TYPE	POINT # 428	POINT # 429	POINT # 430	SCALE FACTOR	Δα
GEODETIC	LAT= 32°30' 02.298"	LAT= 32° 30' 02.298"	LAT= 32°30' 02.296"	———	———
	LONG= 106°35' 59.491"	LONG= 106° 35' 59.491"	LONG= 106° 35' 59.491"	———	———
WSTM COORD.	X= 417,825.109	X= 417,825.109	X= 417,825.104	0.9999 827 SCALE	(-) 0°08' 36"
	Y= 221,601.420	Y= 221,601.420	Y= 221,601.220	0.9997 483 GRID	
NM COORD	X= 392,139.80	X= 392,139.80	X= 392,139.79	0.9999 133 SCALE	(-) 0° 11' 17"
	Y= 546,016.96	Y= 546,016.96	Y= 546,016.76	0.9996 790 GRID	

NM COORDINATE ZONE CENTRAL

BOTSFORD LAND SURVEYING, INC.
212 S. Downtown Mall
LAS CRUCES, NM 88001
Phone 526-2444