WB14
POINT NAME

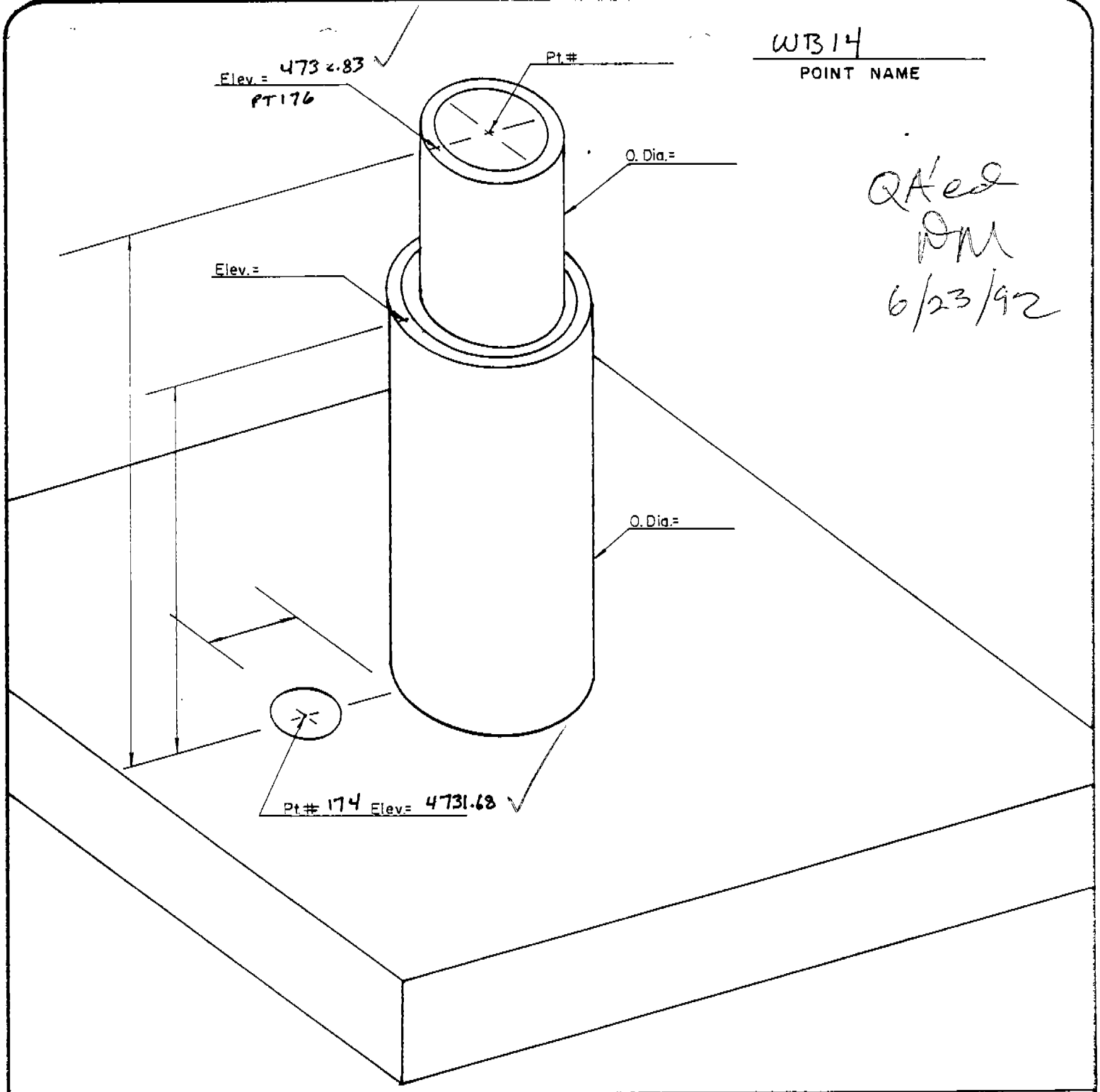

QA'ed
DM
6/23/92

COORD. TYPE	POINT # 174	POINT #	POINT # 176	SCALE FACTOR	Δα
GEODETIC	LAT= 32°29'23.551"	LAT=	LAT= 32°29'23.554"	———	———
	LONG= 106°37'20.966"	LONG=	LONG= 106°37'20.983"	———	———
WSTM COORD.	X= 410,836.618	X=	X= 410,835.148	SCALE = 0.9999 841	(-) 0° 09' 13"
	Y= 217,703.911	Y=	Y= 217,704.208	GRID = 0.9997 546	
NM COORD	X= 385,148.75	X=	X= 385,147.28	SCALE = 0.9999 151	(-) 0° 12' 00"
	Y= 542,125.14	Y=	Y= 542,125.43	GRID = 0.9996 888	

NM COORDINATE ZONE CENTRAL

BOTSFORD LAND SURVEYING, INC.
212 S. Downtown Mall
LAS CRUCES, NM 88001
Phone 526-2444