WELL WB-1
POINT NAME

QA'd - PSE
6/26/90

WB-1 → 5 okay
BLM-6 needs to be resurveyed

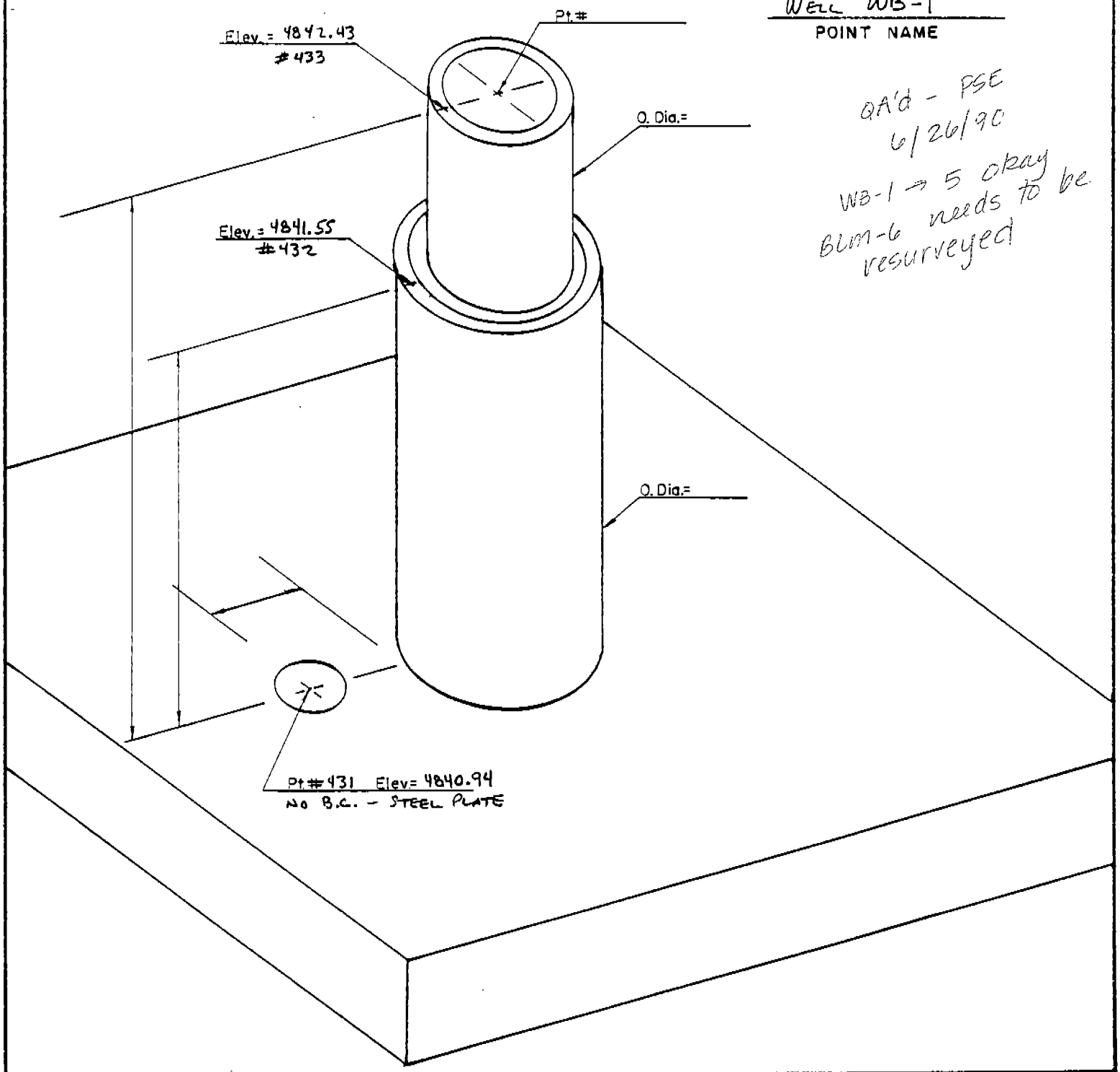

COORD. TYPE	POINT # 431	POINT # 432	POINT # 433	SCALE FACTOR	Δα
GEODETIC	LAT= 32°30'20.705"	LAT= 32°30'20.705"	LAT= 32°30'20.704"	———	———
	LONG= 106°36'13.689"	LONG= 106°36'13.689"	LONG= 106°36'13.688"	———	———
WSTN COORD.	X= 416,613.869	X= 416,613.869	X= 416,613.890	0.9999 830 SCALE	(-) 0°08'43"
	Y= 223,464.730	Y= 223,464.730	Y= 223,464.632	0.9997 514 GRID	
NM COORD	X= 390,930.07	X= 390,930.07	X= 390,930.16	0.9999 136 SCALE	(-) 0° 11' 24"
	Y= 547,881.02	Y= 547,881.02	Y= 547,880.92	0.9996 821 GRID	

NM COORDINATE ZONE CENTRAL

BOTSFORD LAND SURVEYING, INC.
212 S. Downtown Mall
LAS CRUCES, NM 88001
Phone 526-2444