ST-5 ~~406~~ 481
POINT NAME

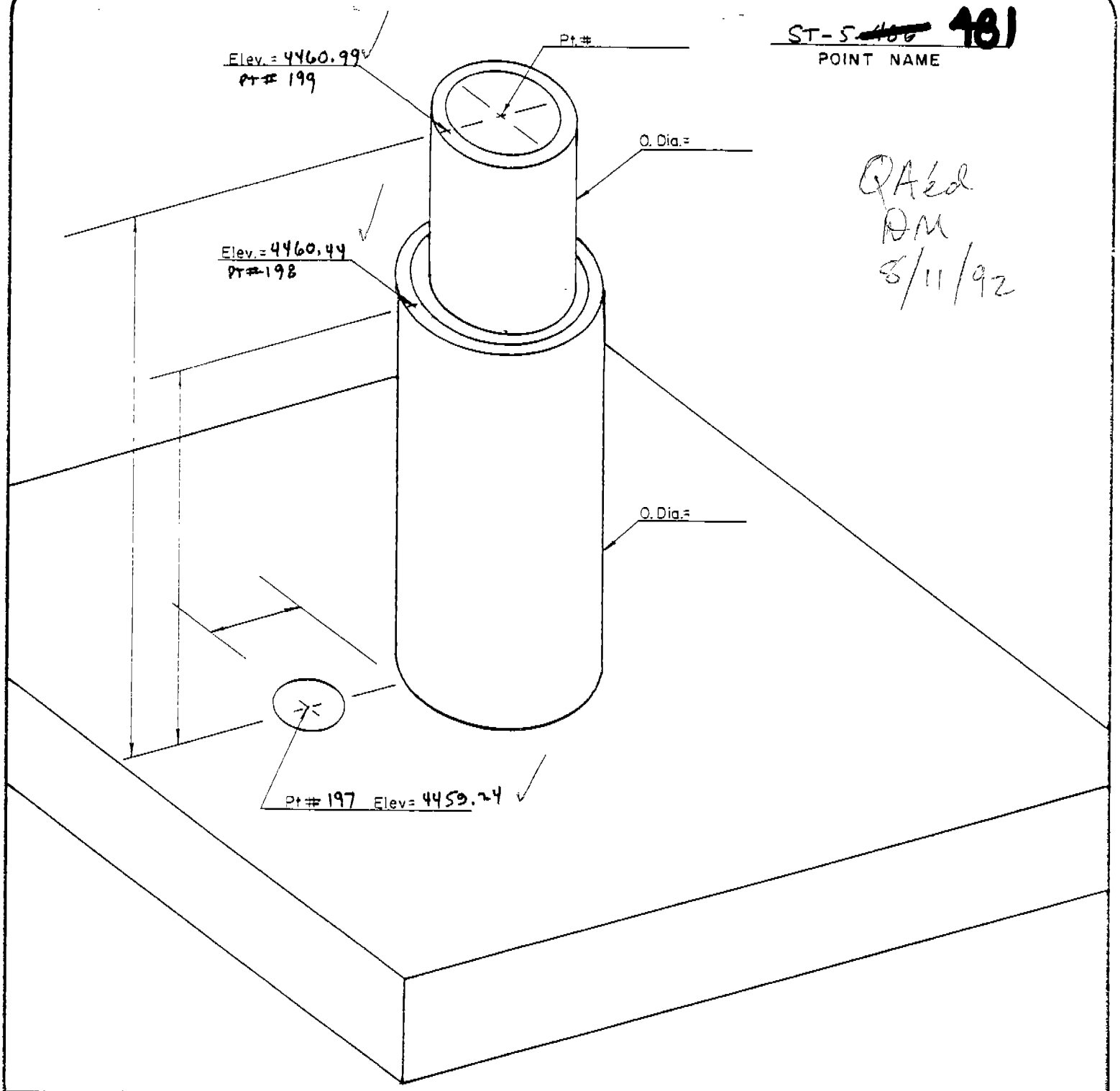

QA'ed
DM
8/11/92

COORD. TYPE	POINT # 197	POINT #198	POINT # 199	SCALE FACTOR	Δα
GEODETIC	LAT= 32°31'34.0192"	LAT= 32°31'34.0273"	LAT= 32°31'34.0283"	———	———
	LONG= 106°39'44.4466"	LONG= 106°39'44.4439"	LONG= 106°39'44.4436"	———	———
WSTM COORD.	X= 398,587.479	X= 398,587.710	X= 398,587.737	0.9999 868 SCALE	(-) 0°10'37"
	Y= 230,924.527	Y= 230,925.345	Y= 230,925.441	0.9997 735 GRID	
NM COORD	X= 372,910.79	X= 372,911.02	X= 372,911.05	0.9999 185 SCALE	(+) 0°13' 18"
	Y= 555,354.41	Y= 555,355.23	Y= 555,355.33	0.9997 052 GRID	

NM COORDINATE ZONE CENTRAL

BOTSFORD LAND SURVEYING, INC.
212 S. Downtown Mall
LAS CRUCES, NM 88001
Phone 526-2444