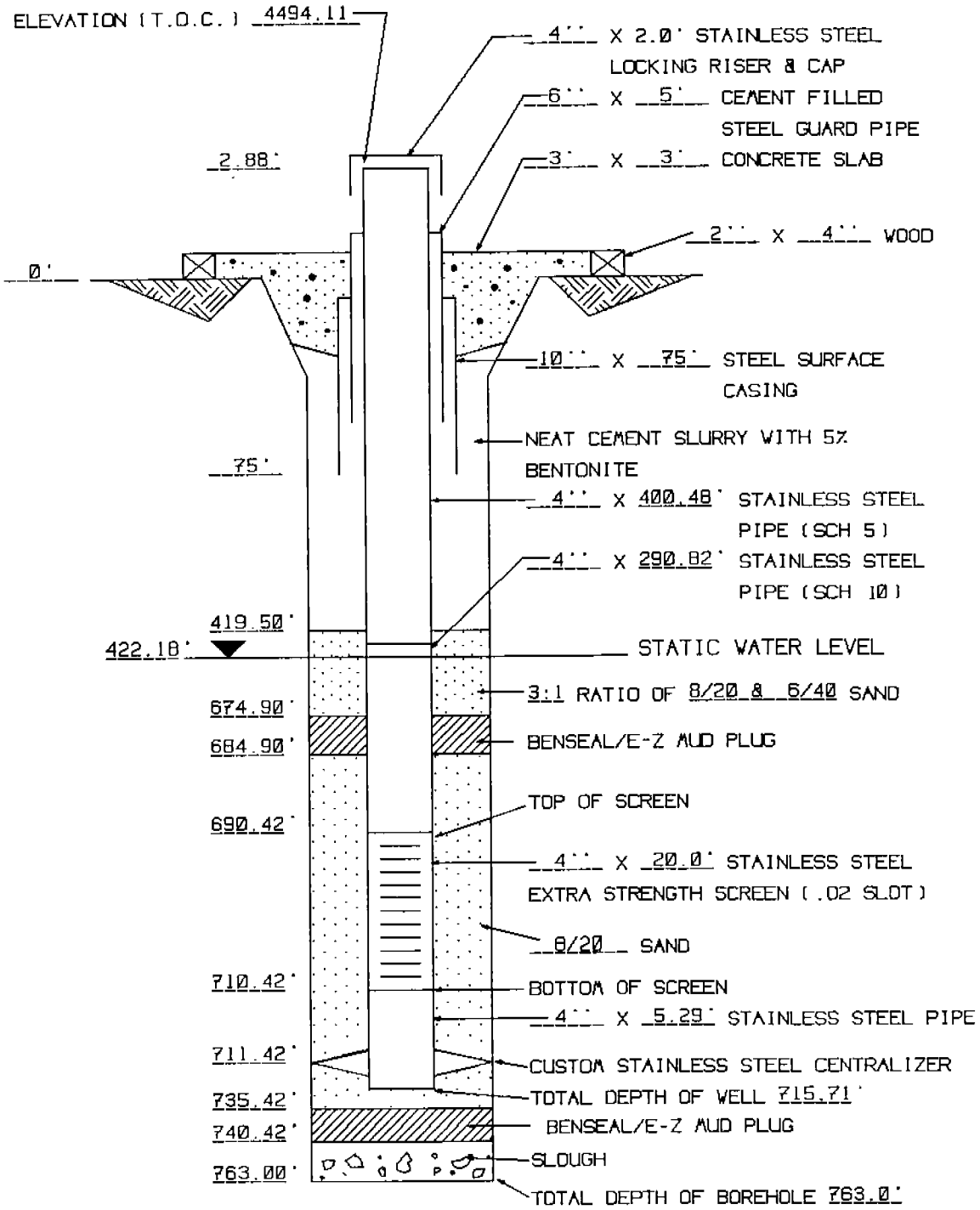

MONITOR WELL ST-4-690 COMPLETION DIAGRAM