ST-4-589
POINT NAME

QAed RM
9/28/92

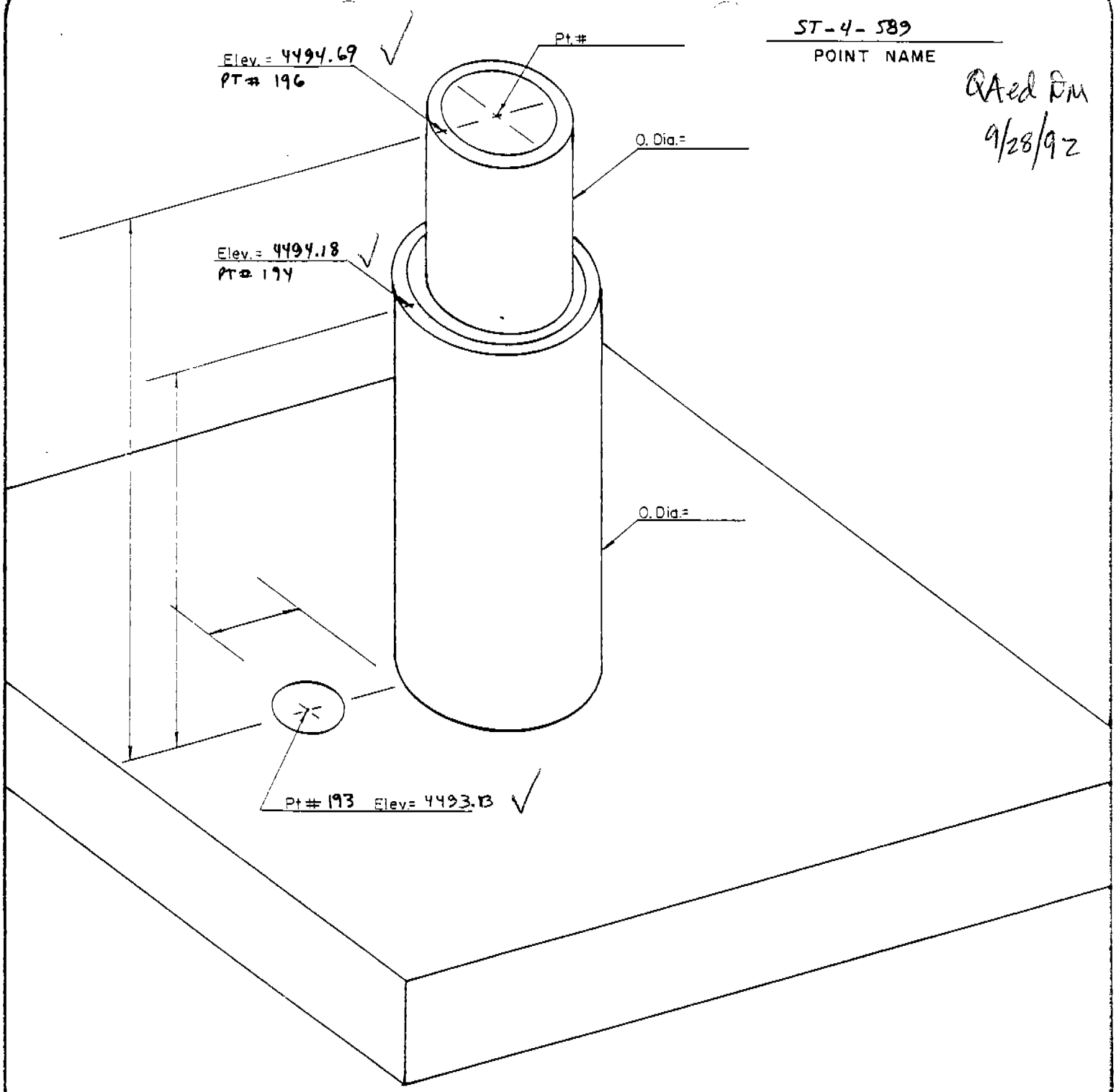

COORD. TYPE	POINT # 193	POINT # 194	POINT # 196	SCALE FACTOR	Δα
GEODETIC	LAT= 32°31'46.9250"	LAT= 32°31'46.9337"	LAT= 32°31'46.9345"	———	———
	LONG= 106°39'22.3687"	LONG= 106°39'22.3701"	LONG= 106°39'22.3702"	———	———
WSTM COORD.	X= 400,481.752	X= 400,481.631	X= 400,481.620	0.9999 863 SCALE	(-)0°10'25"
	Y= 232,222.989	Y= 232,223.871	Y= 232,223.950	0.9997 714 GRID	
NM COORD	X= 374,805.95	X= 374,805.83	X= 374,805.82	0.9999 179 SCALE	(-)0°13'06"
	Y= 556,651.31	Y= 556,652.19	Y= 556,652.27	0.9997 031 GRID	

NM COORDINATE ZONE CENTRAL

BOTSFORD LAND SURVEYING, INC.
212 S. Downtown Mall
LAS CRUCES, NM 88001
Phone 526-2444