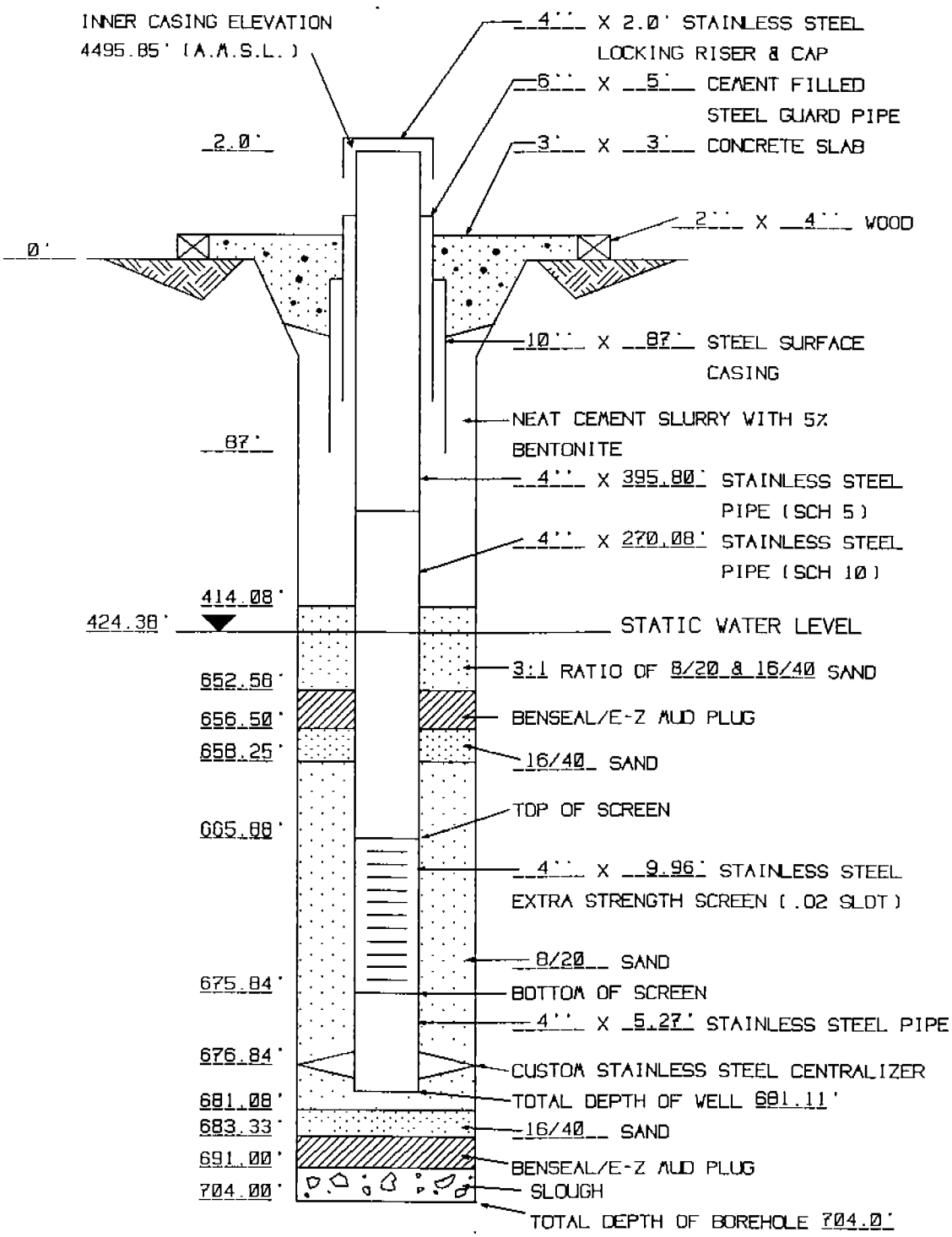

MONITOR WELL ST-3-666 COMPLETION DIAGRAM