ST3 - 486
POINT NAME

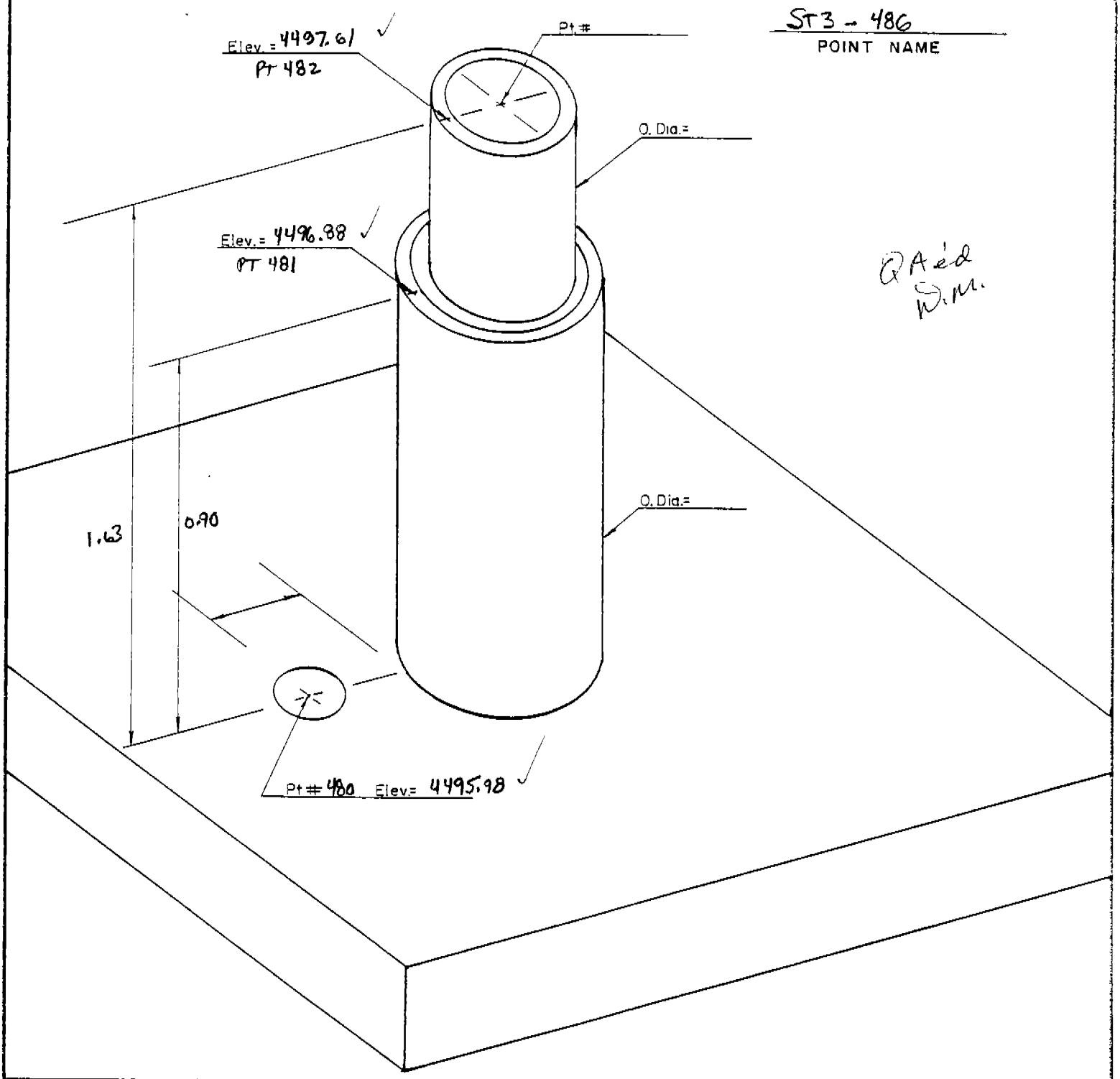

QA'd
W.M.

COORD. TYPE	POINT # 480	POINT # 481	POINT # 482	SCALE FACTOR	Δα
GEODETIC	LAT= 32° 31' 33.830"	LAT= 32° 31' 33.830"	LAT= 32° 31' 33.830"	———	———
	LONG= 106° 39' 20.134"	LONG= 106° 39' 20.146"	LONG= 106° 39' 20.146"	———	———
WSTM COORD.	X= 400,669.096	X= 400,668.047	X= 400,668.007	SCALE= 0.9999 863	(-) 0° 10' 24"
	Y= 230,899.036	Y= 230,899.083	Y= 230,899.085	GRID= 0.9997 713	
NM COORD	X= 374,992.22	X= 374,992.17	X= 374,992.13	SCALE= 0.9999 179	(-) 0° 13' 05"
	Y= 555,327.30	Y= 555,327.35	Y= 555,327.35	GRID= 0.9997 029	

NM COORDINATE ZONE CENTRAL

BOTSFORD LAND SURVEYING, INC.
212 S. Downtown Mall
LAS CRUCES, NM 88001
Phone 526-2444