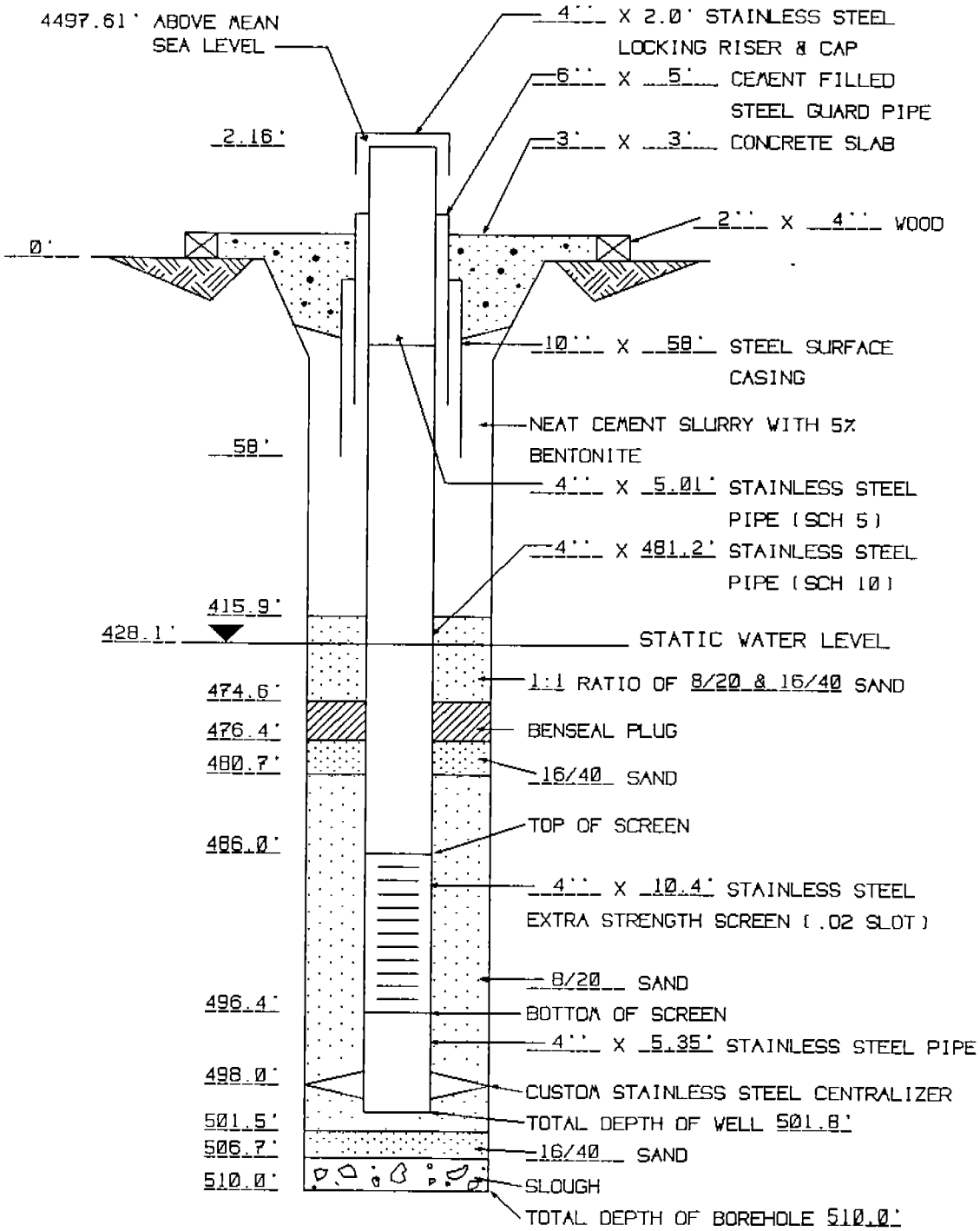

MONITOR WELL ST-3-486 COMPLETION DIAGRAM