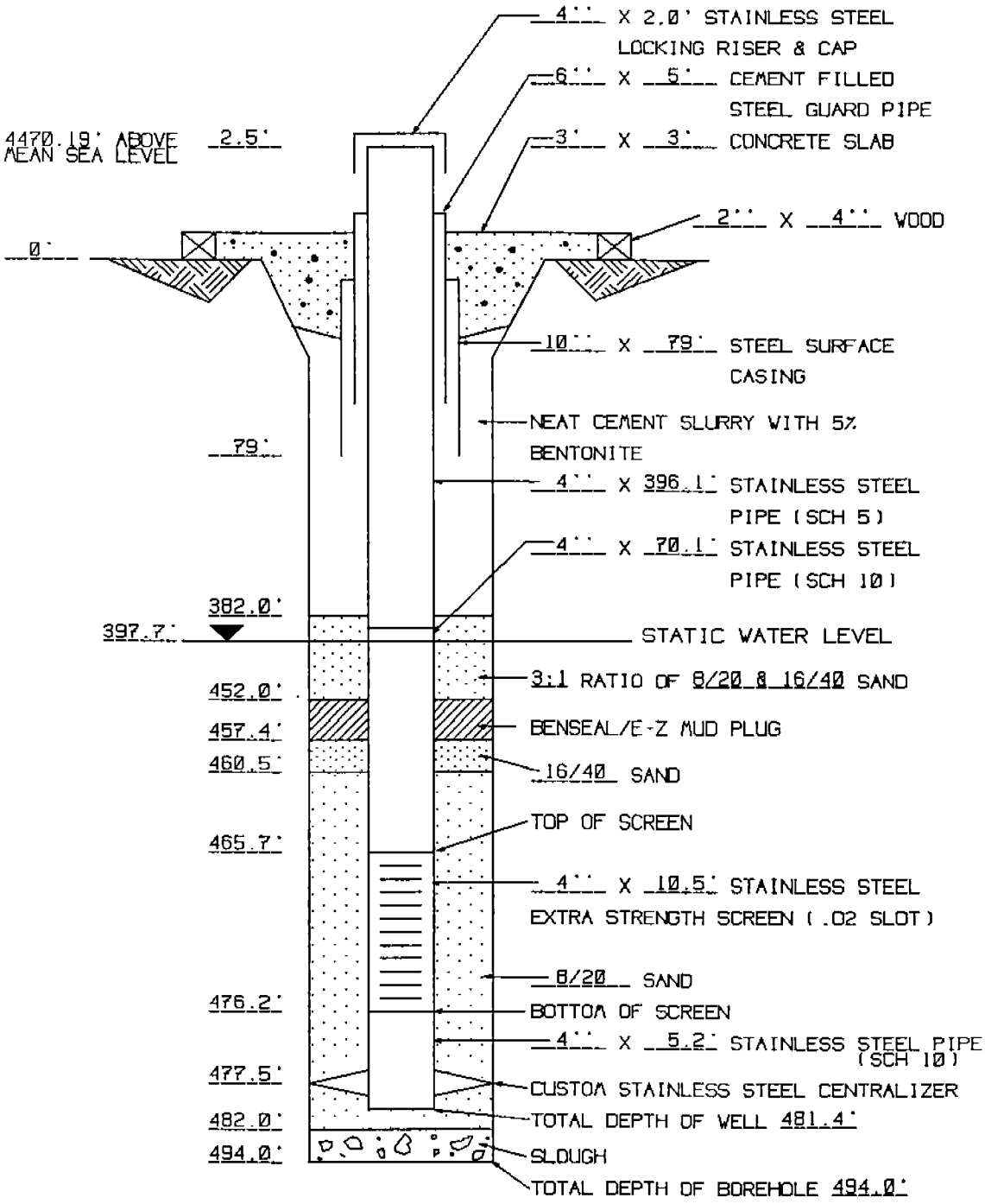

MONITOR WELL ST-2-466 COMPLETION DIAGRAM