ST-1-630
POINT NAME

QAed DM
9/28/92

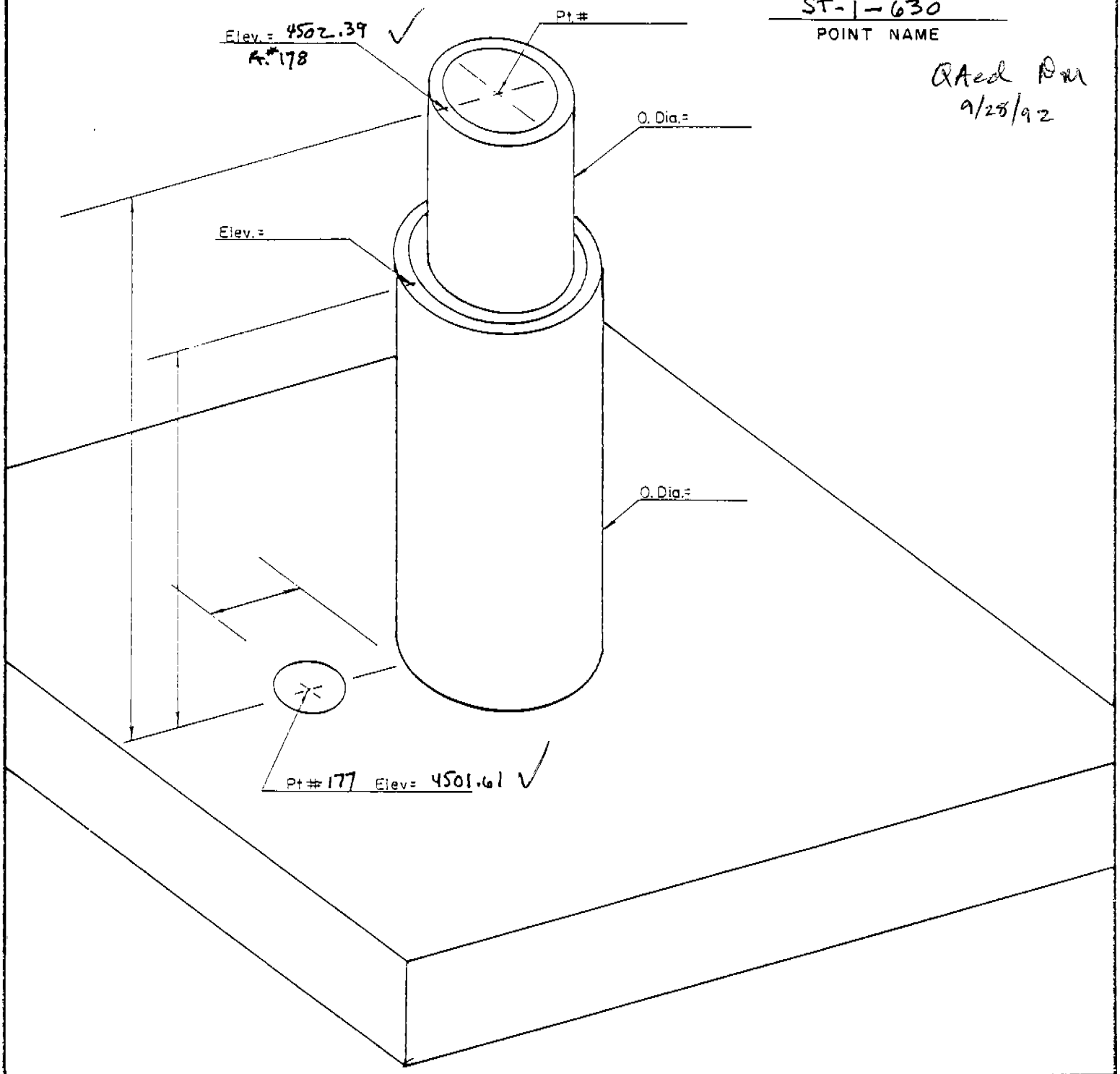

COORD. TYPE	POINT # 177	POINT # 178	POINT #	SCALE FACTOR	Δα
GEODETIC	LAT= 32° 31' 16.8294"	LAT= 32° 31' 16.8382"	LAT=	———	———
	LONG= 106° 39' 15.6657"	LONG= 106° 39' 15.6680"	LONG=	———	———
WSTM COORD.	X= 401,046.481	X= 401,046.287	X=	SCALE = 0.9999 862	
	Y= 229,179.820	Y= 229,180.709	Y=	GRID= 0.9997709	(-) 0° 10' 21"
NM COORD	X= 375,368.26	X= 375,368.07	X=	SCALE= 0.9999 178	
	Y= 553,607.90	Y= 553,608.79	Y=	GRID= 0.9997 025	(-) 0° 13' 03"

NM COORDINATE ZONE CENTRAL ZONE

BOTSFORD LAND SURVEYING, INC.
212 S. Downtown Mall
LAS CRUCES, NM 88001
Phone 526-2444