Well ST-1-541
POINT NAME

QA'ed
DM 1/2/92

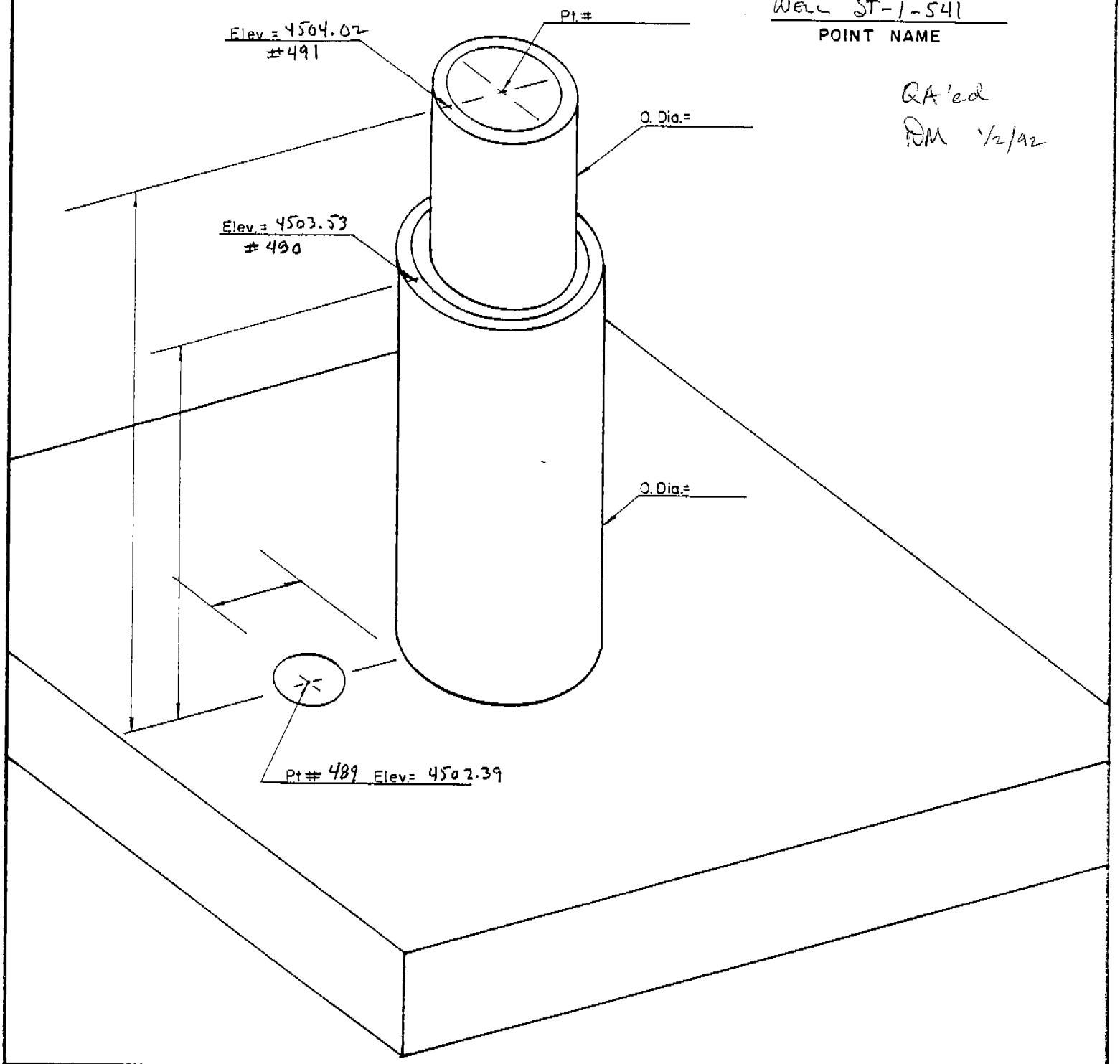

COORD. TYPE	POINT # 489	POINT #490	POINT #491	SCALE FACTOR	Δα
GEODETIC	LAT=32°31' 17.088"	LAT= 32°31' 17.100"	LAT=32°31' 17.101"	———	———
	LONG= 106°39' 14.810"	LONG=106°39' 14.813"	LONG= 106°39" 14.813"	———	———
WSTM COORD.	X= 401, 119.808	X= 401, 119.598	X= 401, 119.587	0.9999 862 SCALE	(-) 0° 10' 20.8"
	Y=229,205.723	Y= 229, 206.986	Y=229, 207.055	0.9997 709 GRID	
NM COORD	X= 375, 441.62	X= 375, 441, 41	X= 375, 441.367	0.9999 178 SCALE	(-) 0° 13' 02.1"
	Y= 553, 633.76	Y= 553, 635.02	Y= 553, 635.074	0.9997 024 GRID	

NM COORDINATE ZONE CENTRAL

BOTSFORD LAND SURVEYING, INC.
212 S. Downtown Mall
LAS CRUCES, NM 88001
Phone 526-2444