ST-1-473

POINT NAME

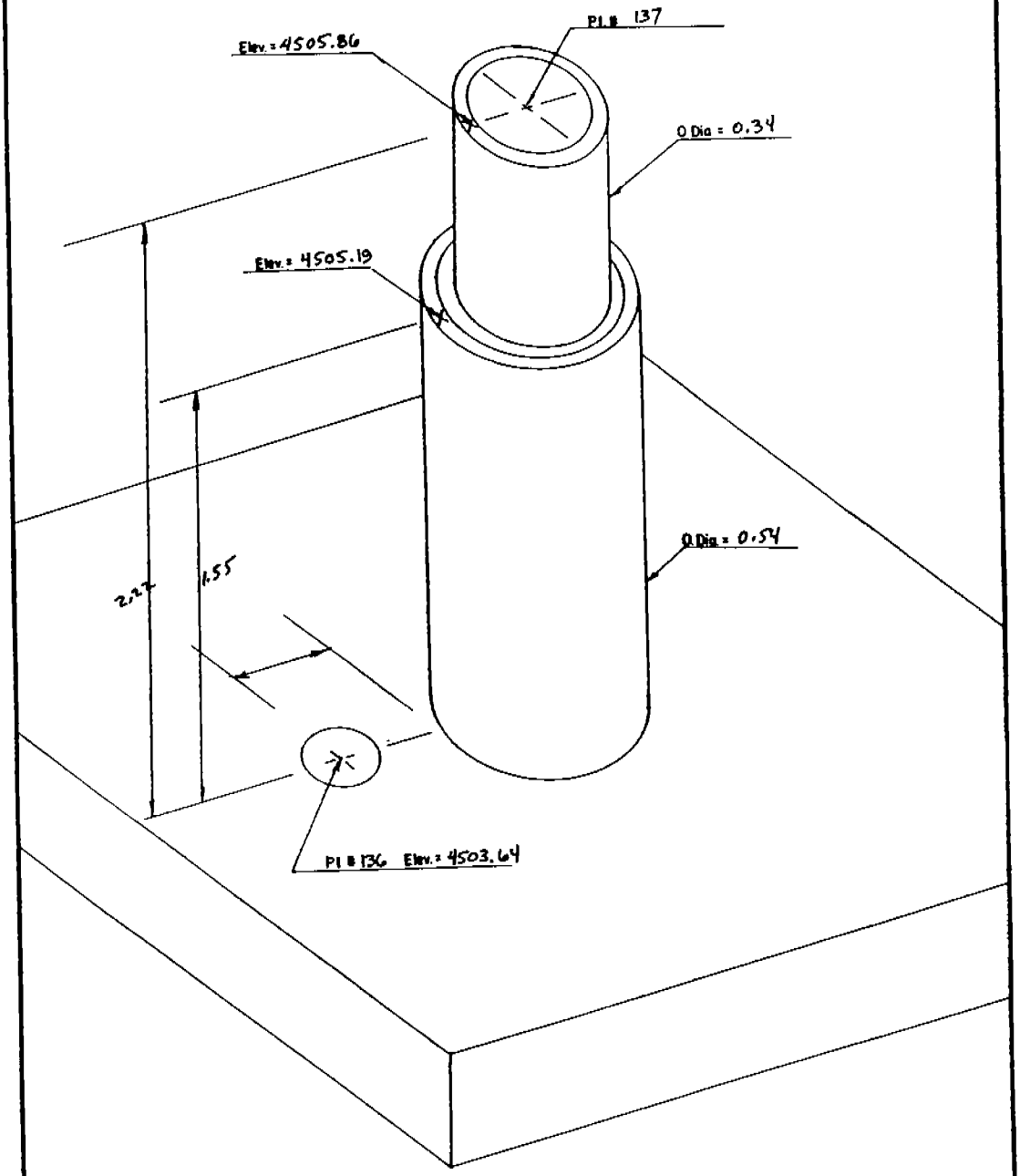

COORD. TYPE	POINT # 136	POINT # 137	POINT #	SCALE FACTOR	Δα
GEODETIC	LAT= 32°31' 16.695"	LAT= 32°31'16.635"	LAT=	—	—
	LONG= 106°39' 14.619"	LONG= 106°39' 14.615"	LONG=	—	—
WSTM COORD.	X= 401,136.074	X= 401,136.348	X=	0.9999 877 SCALE	-0° 11' 01" ±
	Y= 229,161.291	Y= 229,160.270	Y=	0.9997 644 GRID	
NM COORD	X= 375,457.804	X= 375,458.143	X=	0.9999 178 SCALE	-0° 13' 02" ±
	Y= 553,589.336	Y= 553,588.324	Y=	0.9997 024 GRID	

NM COORDINATE ZONE CENTRAL

BOTSFORD LAND SURVEYING, INC.
212 S. Downtown Mall
LAS CRUCES, NM 88001
Phone 526-2444