WELL PLT
POINT NAME

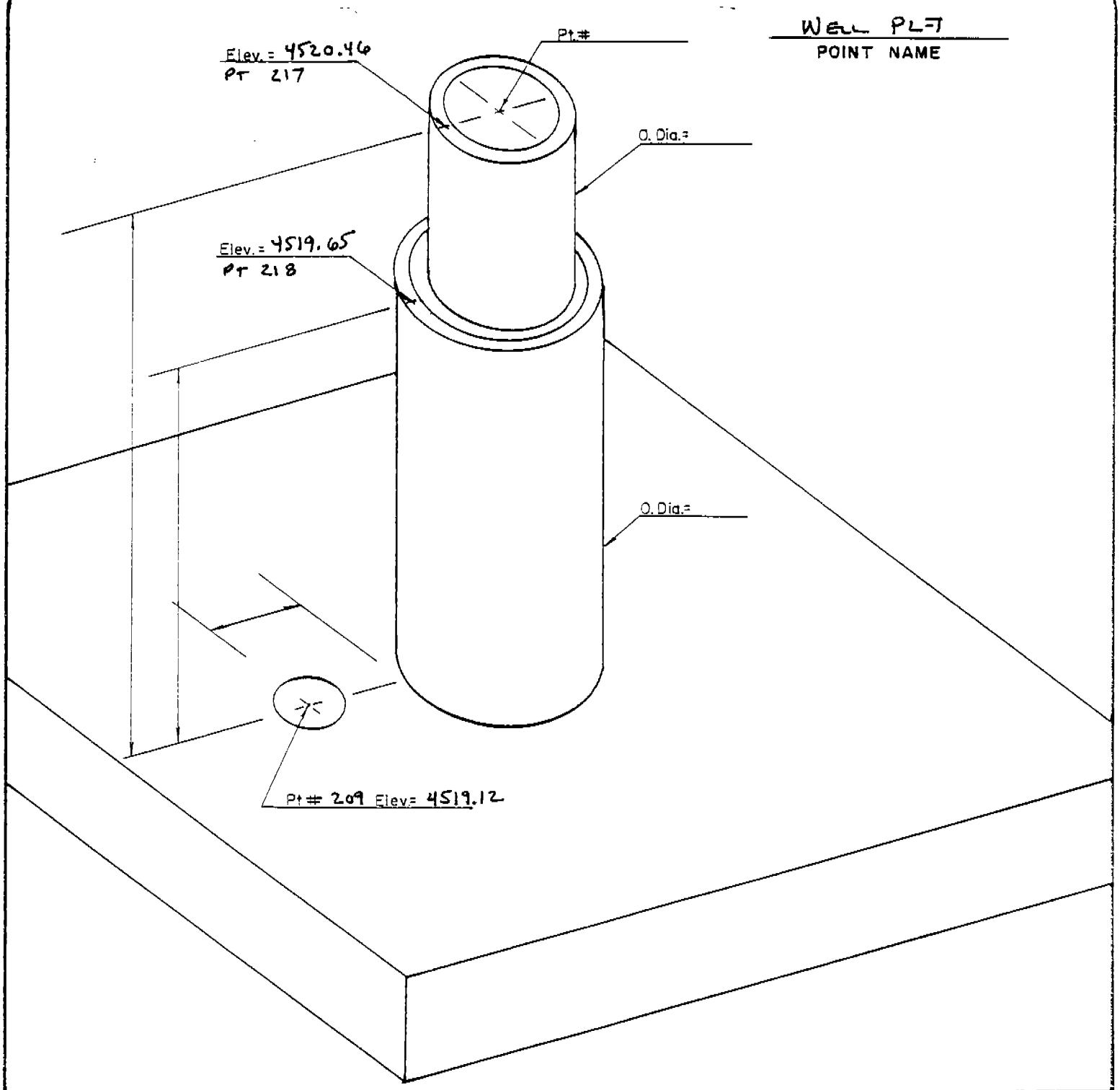

COORD. TYPE	POINT # 209	POINT # 217	POINT # 218	SCALE FACTOR	Δα
GEODETIC	LAT= 32°30' 27.37253"	LAT= 32°30' 27.36103"	LAT= 32°30' 27.36236"	———	———
	LONG= 106°39' 01.15066"	LONG= 106°39' 01.15007"	LONG= 106°39' 01.15012"	———	———
WSTM COORD.	X= 402, 274.466	X= 402, 274.513	X= 402, 274.509	SCALE = 0.9999 859	
	Y= 224, 178.037	Y= 224, 176.875	Y= 224, 177.009	GRID = 0.9997 698	(-) 0° 10' 13"
NM COORD	X= 376, 592.25	X= 376, 592.30	X= 376, 592.29	SCALE = 0.9999 174	
	Y= 548, 605.57	Y= 548, 604.34	Y= 548, 604.48	GRID = 0.9997013	(-) 0° 12' 54"

NM COORDINATE ZONE CENTRAL ZONE

BOTSFORD LAND SURVEYING, INC.
212 S. Downtown Mall
LAS CRUCES, NM 88001
Phone 526-2444