PL-4-464

POINT NAME

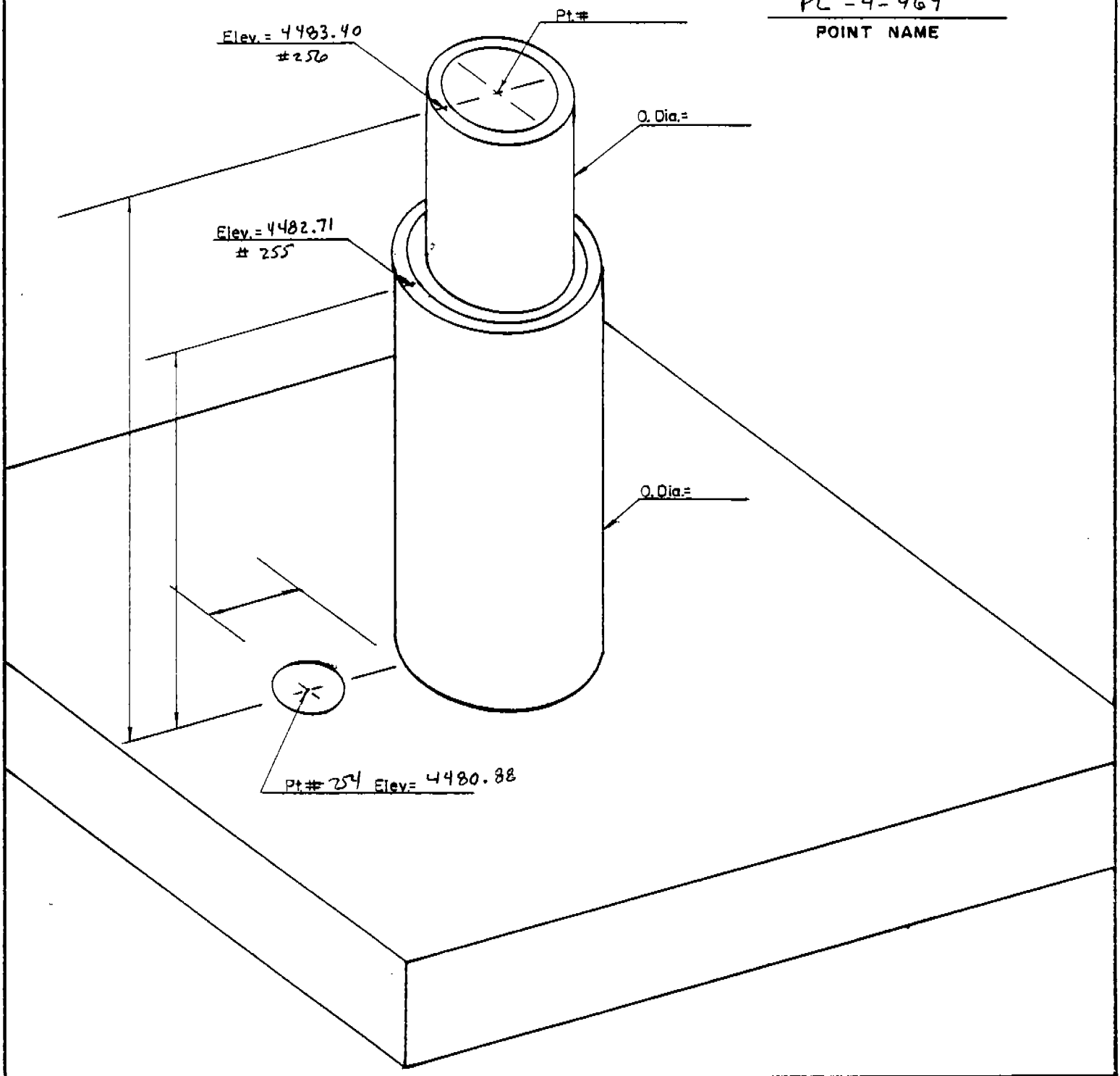

COORD. TYPE	POINT # 254	POINT # 256	POINT # 255	SCALE FACTOR	Δα
GEODETIC	LAT= 32°31'01.614"	LAT= 32°31'01.606"	LAT= 32°31'01.607"	———	———
	LONG= 106°39'32.354"	LONG= 106°39'32.356"	LONG= 106°39'32.356"	———	———
NSTM COORD.	X= 399,612.847	X= 399,612.693	X= 399,612.710	0.9999862 SCALE	(-)0° 10' 20"
	Y= 227,646.527	Y= 227,645.701	Y= 227,645.790	0.9997710 GRID	
NM COORD	X= 373,933.520	X= 373,933.346	X= 373,933.346	0.9999182 SCALE	(+)0° 13' 11"
	Y= 552,075.811	Y= 552,075.004	Y= 552,075.105	0.9997075 GRID	

NM COORDINATE ZONE CENTRAL

BOTSFORD LAND SURVEYING, INC.
212 S. Downtown Mall
LAS CRUCES, NM 88001
Phone 526-2444