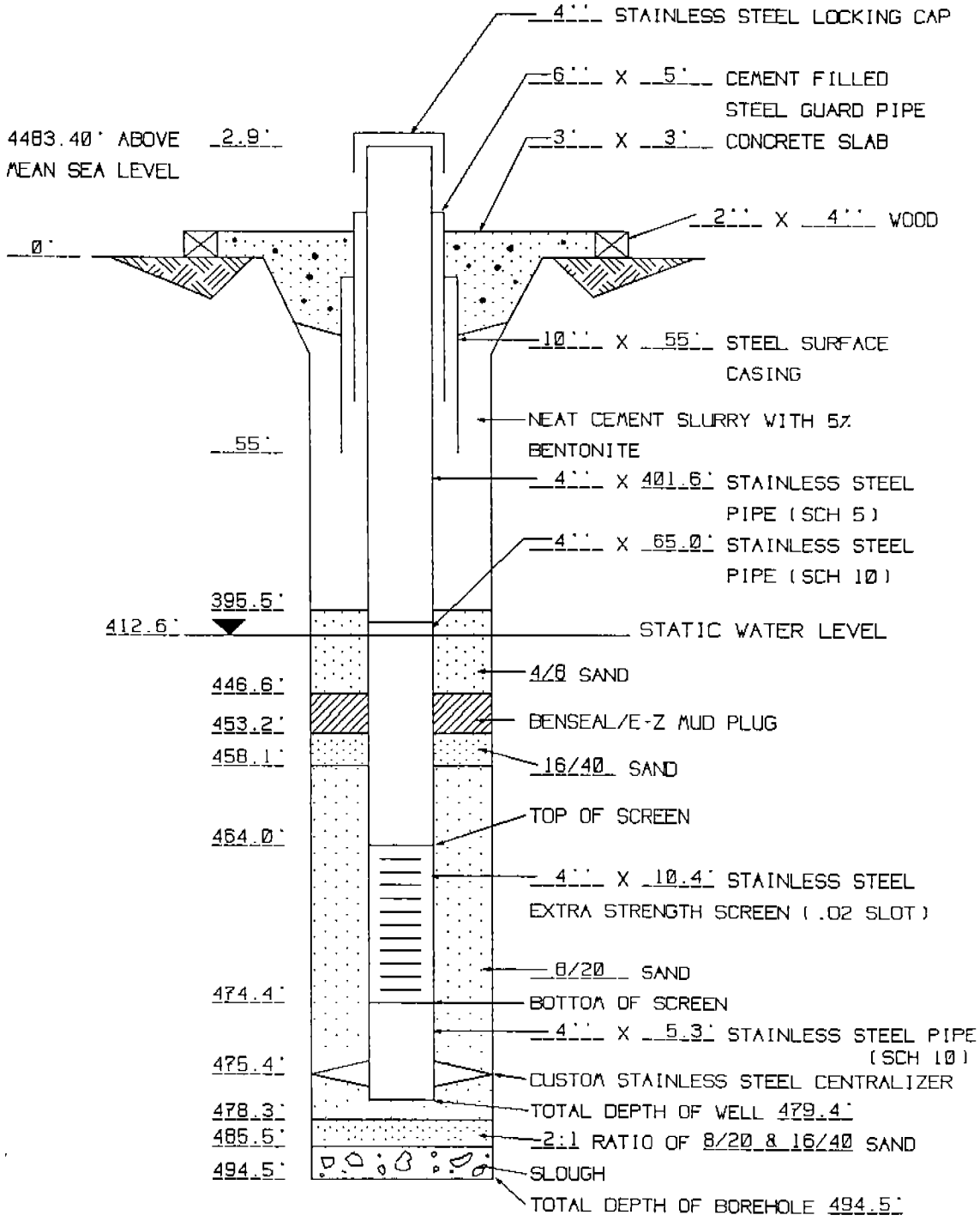

MONITOR WELL PL-4-464 COMPLETION DIAGRAM