NASA -7
POINT NAME

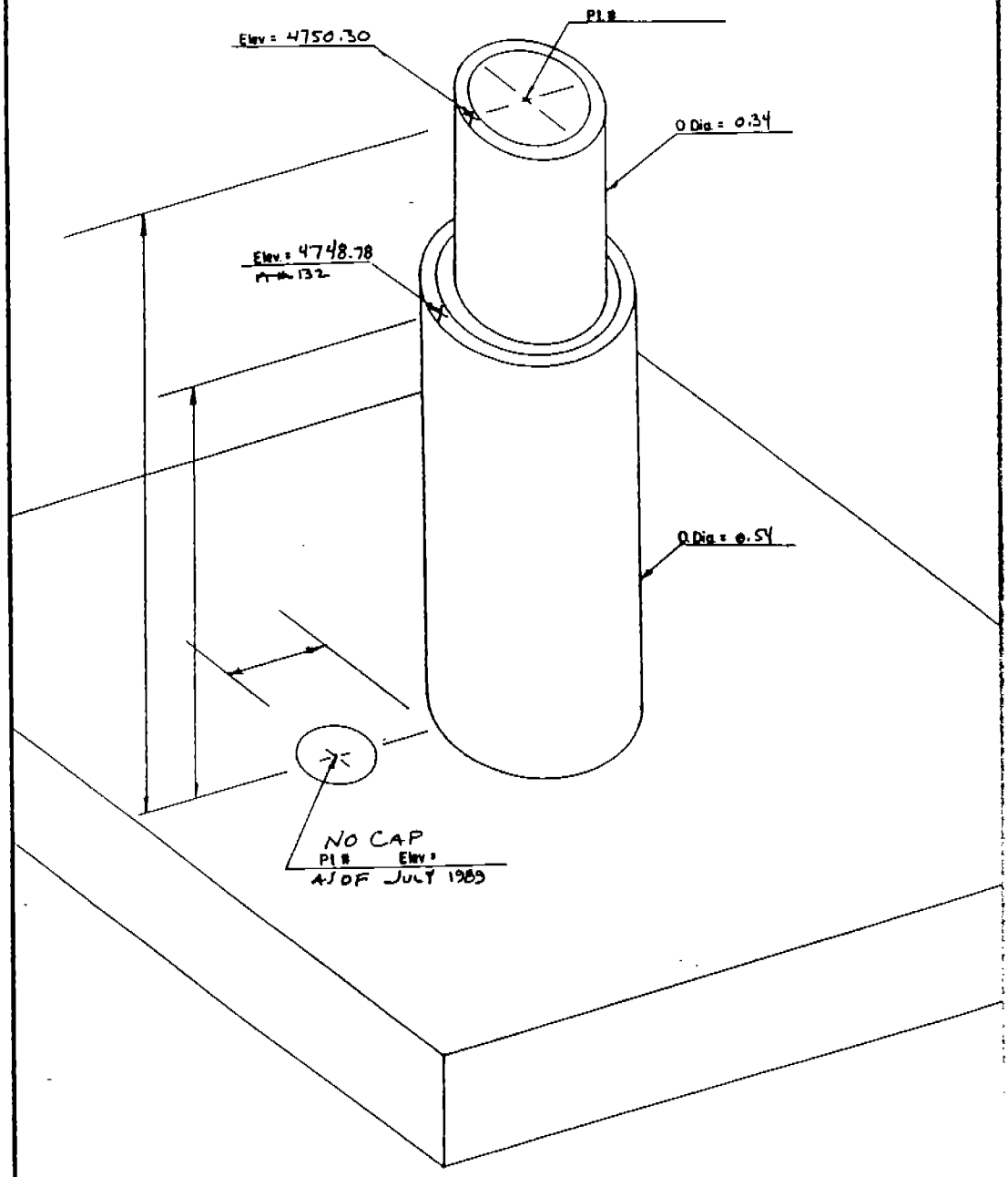

COORD. TYPE	POINT # 132	POINT #	POINT #	SCALE FACTOR	Δα
GEODETIC	LAT = 32°30'33.473"	LAT =	LAT =	———	———
	LONG = 106°36'48.235"	LONG =	LONG =	———	———
WSTM COORD.	X = 413,658.691	X =	X =	0.9999 877 SCALE	- 0° 11' 01"
	Y = 224,762.693	Y =	Y =	0.9997 644 GEO	
NM COORD	X = 387,976.173	X =	X =	0.9999 144 SCALE	-0° 11' 43"
	Y = 549,181.200	Y =	Y =	0.9996 873 GEO	

NM COORDINATE ZONE CENTRAL

BOTSFORD LAND SURVEYING, INC.
212 S. Downtown Mall
LAS CRUCES, NM 88001
Phone 526-2444