BW-7-211

POINT NAME

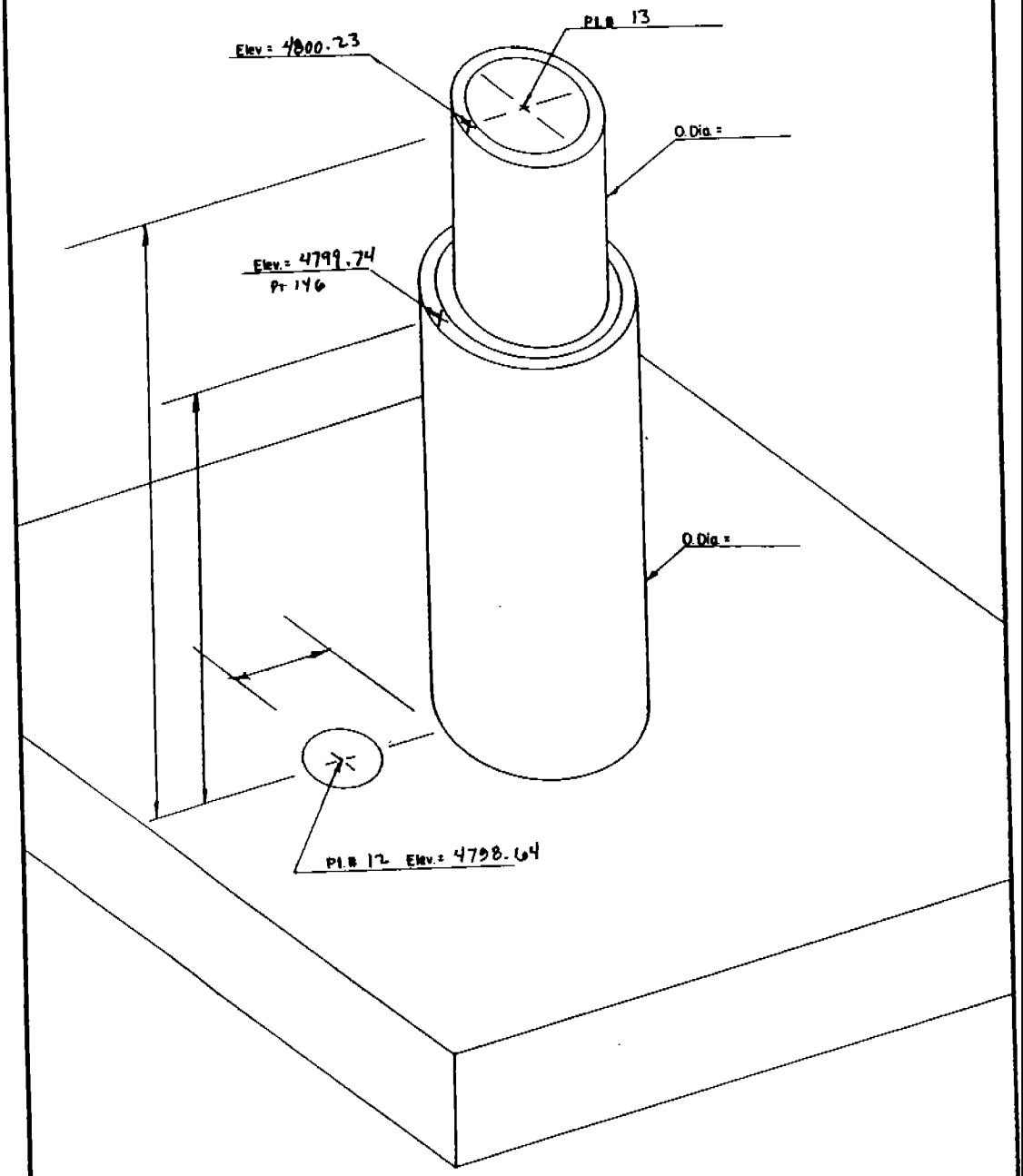

COORD. TYPE	POINT # 12	POINT # 146	POINT # 13	SCALE FACTOR	Δα
GEODETIC	LAT=32°31' 40.708"	LAT=32°31'40.695"	LAT=32°31' 40.693"	———	———
	LONG=106°36' 46.213"	LONG=106°36'46.212"	LONG=106°36' 46.212"	———	———
WSTM COORD.	X= 413,849.705	X= 413,849.797	X= 413,849.817	0.9999877 Scale	-0° 11' 01"±
	Y= 231,556.895	Y= 231,555.639	Y= 231,555.369	0.9997649 Grid	
NM COORD	X= 388,172.947	X= 388,172.528	X= 388,172.528	0.9999143 Scale	-0° 11' 42"±
	Y= 555,974.824	Y= 555,973.510	Y= 555,973.308	0.9996848 Grid	

NM COORDINATE ZONE CENTRAL

BOTSFORD LAND SURVEYING, INC.
212 S. Downtown Mall
LAS CRUCES, NM 88001
Phone 526-2444