BW - 1 - 268

POINT NAME

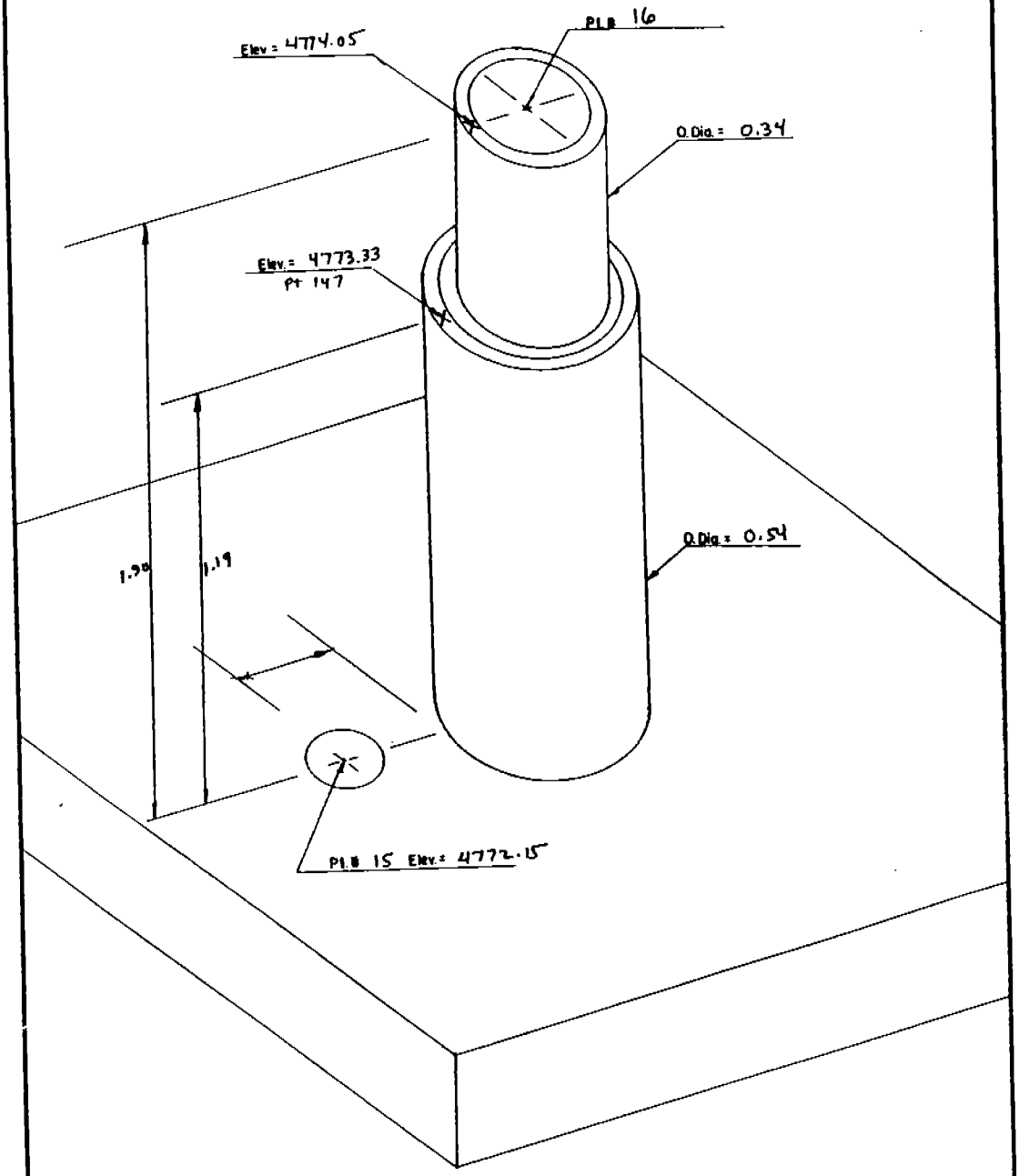

COORD. TYPE	POINT # 15	POINT # 147	POINT # 16	SCALE FACTOR	Δα
GEODETIC	LAT = 32°31' 27.400"	LAT = 32°31'27.390"	LAT = 32°31' 27.387"	———	———
	LONG = 106°36' 46.688"	LONG = 106°36' 46.689"	LONG = 106°36' 46.689"	———	———
WSTM COORD.	X = 413, 805.484	X = 413, 805.451	X = 413, 805.442	0.9999 877 SCALE	-0° 11' 01"
	Y = 230, 212.081	Y = 230, 211.085	Y = 230, 210.815	0.9997 644 GRID	
NM COORD	X = 388, 127.200	X = 388, 127.111	X = 388, 127.110	0.9999 143 SCALE	-0° 11' 42"±
	Y = 554, 630.164	Y = 554, 629.154	Y = 554, 628.851	0.9996 861 GRID	

NM COORDINATE ZONE CENTRAL

BOTSFORD LAND SURVEYING, INC.
212 S. Downtown Mall
LAS CRUCES, NM 88001
Phone 526-2444