BLM – 27-270

POINT NAME

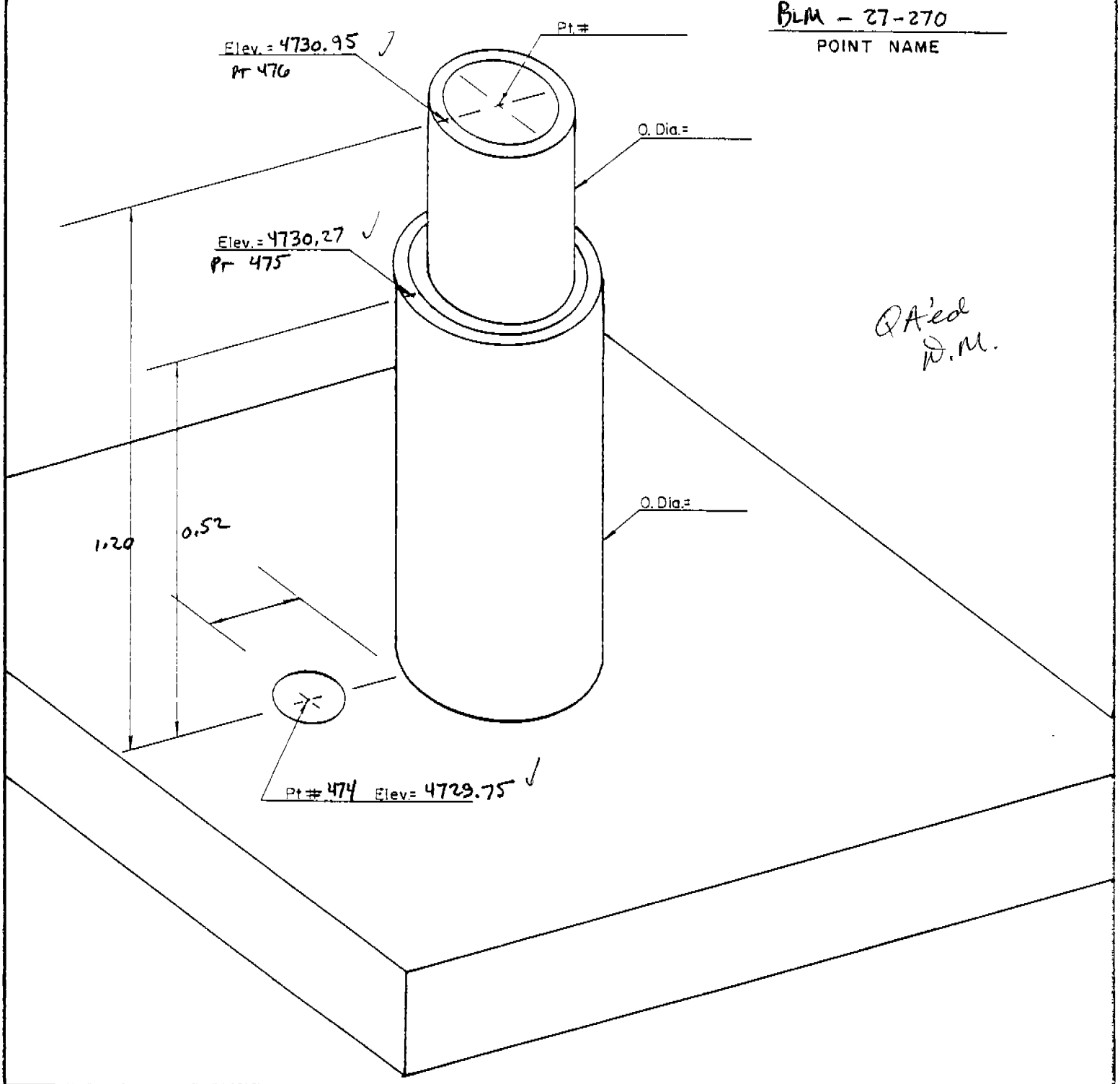

QA'ed
D.M.

COORD. TYPE	POINT # 474	POINT # 475	POINT # 476	SCALE FACTOR	Δα
GEODETIC	LAT= 32°31'13.858"	LAT=32°31' 13,863"	LAT= 32°31'13.863"	———	———
	LONG=106°37'03.121"	LONG= 106°37'03.110"	LONG=106°37'03.109"	———	———
WSTM COORD.	X= 412,394.854	X= 412,395.774	X= 412,395.864	SCALE = 0.9999 838	(-)0°09'10"
	Y= 228,847.349	Y= 228,847.789	Y= 228,847.832	GRID = 0.9997 576	
NM COORD	X= 386,715.55	X= 386,716.50	X= 386,716.58	SCALE = 0.9999 147	(-)0° 11' 51"
	Y= 553,266.54	Y= 553,267.05	Y= 553,267.05	GRID = 0.9998 885	

NM COORDINATE ZONE CENTRAL

BOTSFORD LAND SURVEYING, INC.
212 S. Downtown Mall
LAS CRUCES, NM 88001
Phone 526-2444