BLM - 25-455

POINT NAME

QA ed
DM 1/2/92

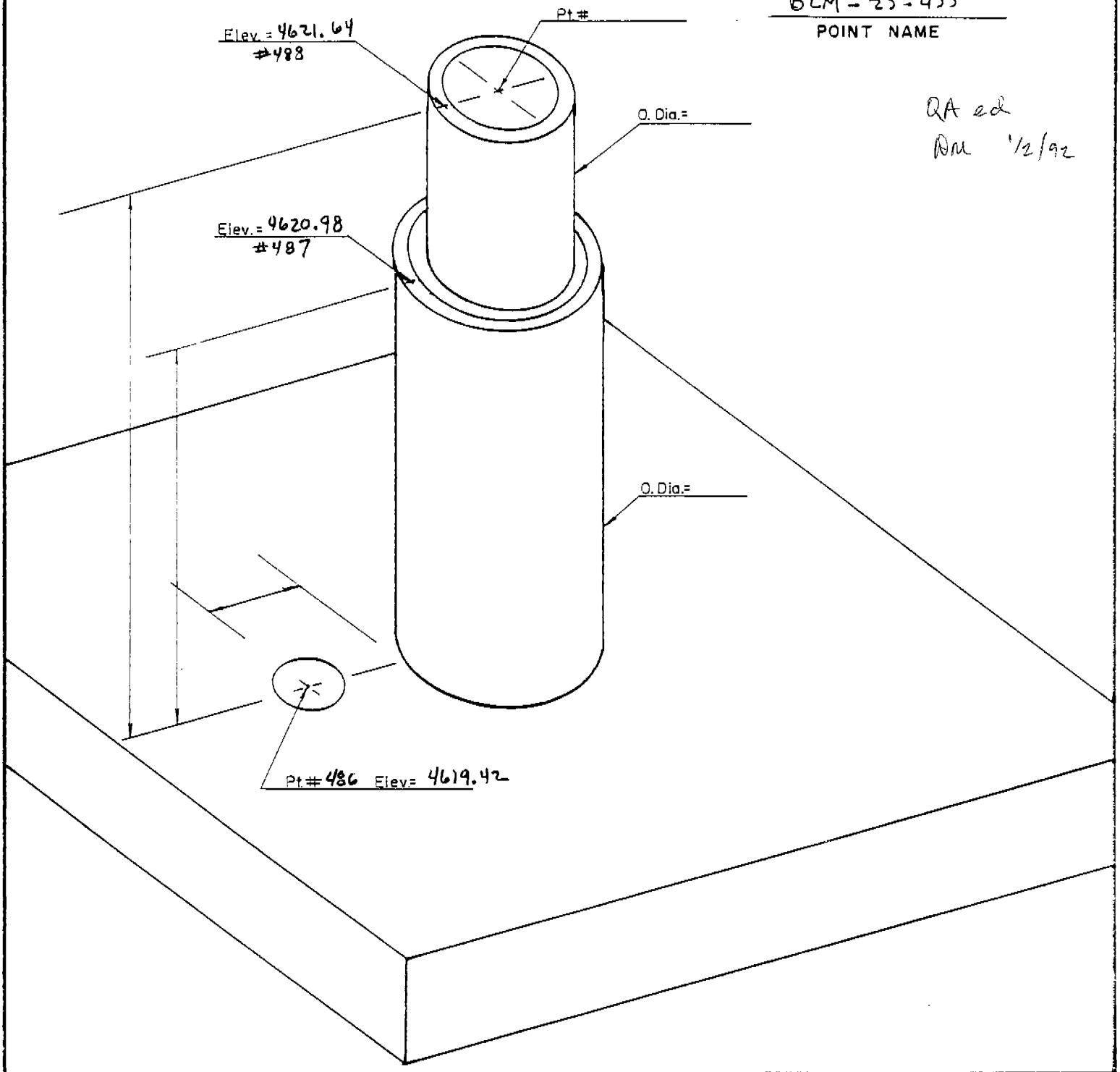

COORD. TYPE	POINT # 486	POINT # 487	POINT # 488	SCALE FACTOR	Δα
GEODETIC	LAT= 32°30' 49.174"	LAT= 32°30' 49.162"	LAT= 32°30' 49.161"	———	———
	LONG= 106° 37' 59.837"	LONG= 106° 37' 59.837"	LONG= 106° 37' 59.837"	———	———
WSTM COORD.	X= 407, 531.452	X= 407, 531.418	X= 407, 531.415	0.9999 848 SCALE	(-) 0°09'40.4"
	Y= 226, 366.087	Y= 226, 364.837	Y= 226, 364.737	0.9997 639 GRID	
NM COORD	X= 381, 850.58	X= 381, 850.58	X= 381, 850.57	0.9999 160 SCALE	(-) 0°12' 21.7"
	Y= 550, 789.29	Y= 550, 788.07	Y= 550, 787.37	0.9996 951 GRID	

NM COORDINATE ZONE CENTRAL

BOTSFORD LAND SURVEYING, INC.
212 S. Downtown Mall
LAS CRUCES, NM 88001
Phone 526-2444