BLM - 24-565

POINT NAME

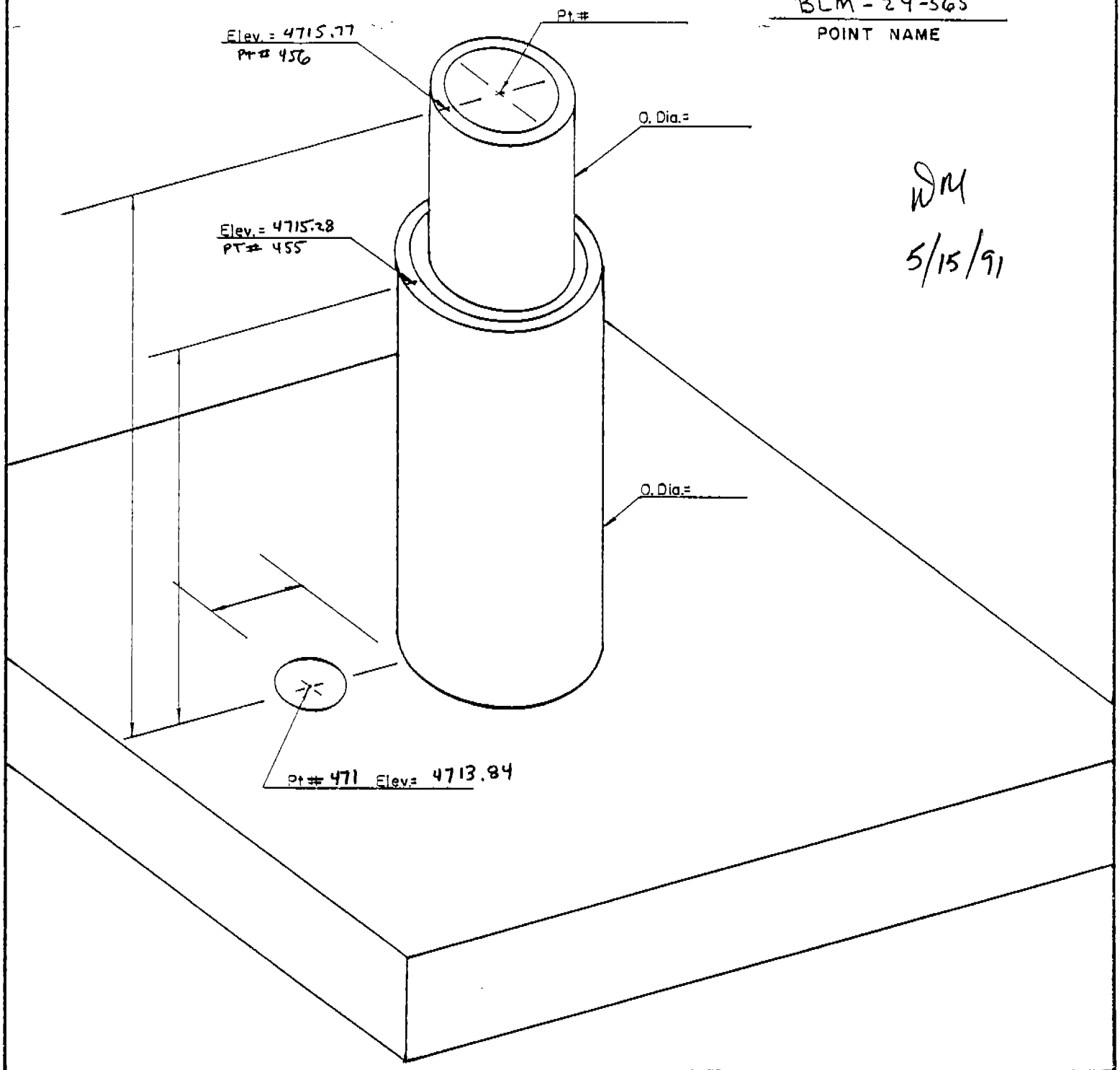

DM
5/15/91

COORD. TYPE	POINT # 471	POINT # 455	POINT # 456	SCALE FACTOR	Δα
GEODETIC	LAT= 32°31' 43.633"	LAT=32°31' 43.622"	LAT=32°31' 43.621"	———	———
	LONG= 106°37' 30.455"	LONG=106°37' 30.452"	LONG=106°37' 30.452"	———	———
WSTM COORD.	X= 410,062.539	X= 410,062.807	X= 410,062.791	0.9999 843 SCALE	
	Y= 231,862.667	Y= 231,861.569	Y= 231,861.461	0.9997 588 GRID	(-) 0° 09' 25"
NM COORD	X= 384,385.82	X= 384,386.07	X= 384,386.07	0.9999 153 SCALE	
	Y= 556,283.52	Y= 556,282.41	Y= 556,282.30	0.9996 898 GRID	(-) 0° 12' 06"

NM COORDINATE ZONE CENTRAL

BOTSFORD LAND SURVEYING, INC.
212 S. Downtown Mall
LAS CRUCES, NM 88001
Phone 526-2444