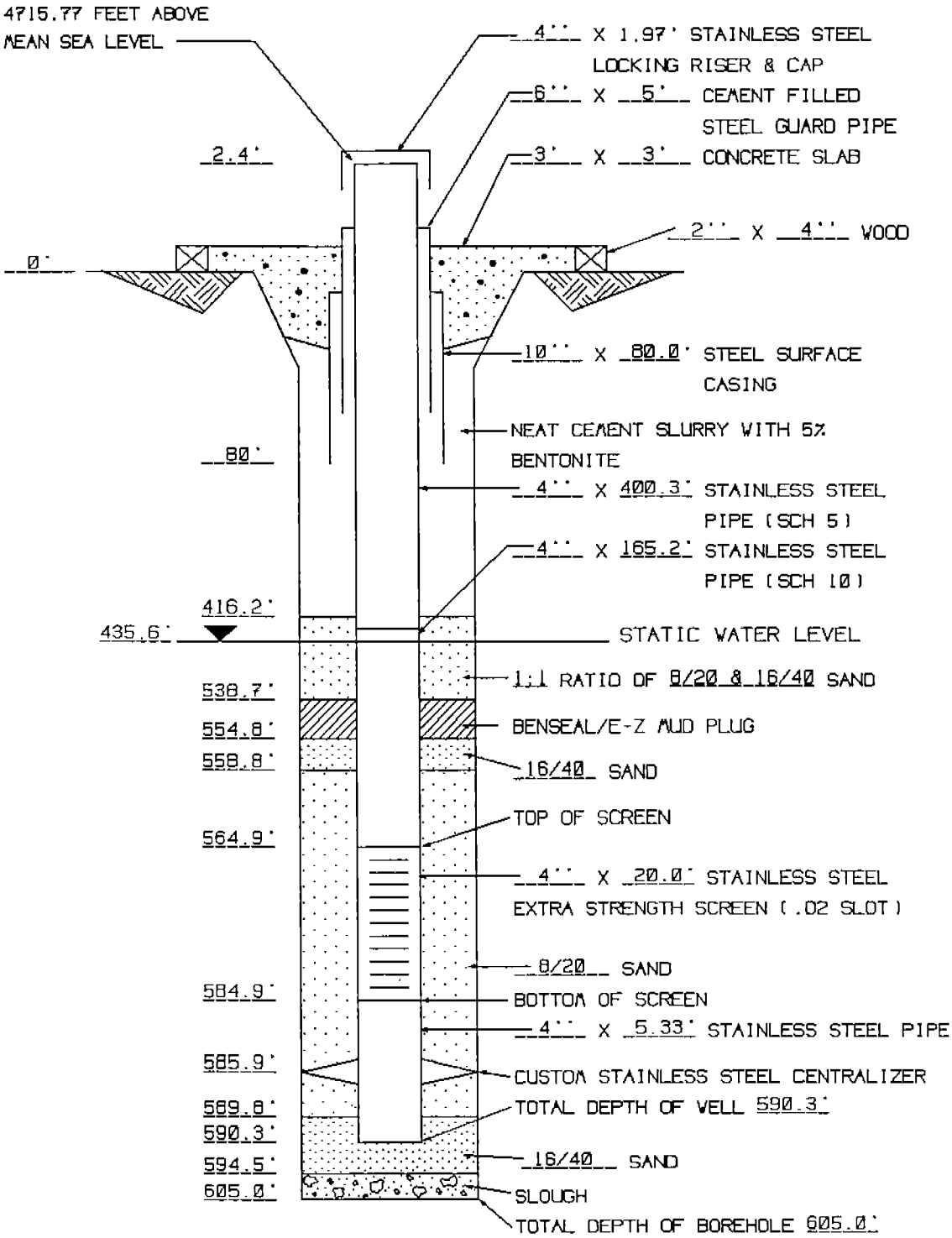

MONITOR WELL BLM-24-565 COMPLETION DIAGRAM