BLM 21-400
POINT NAME

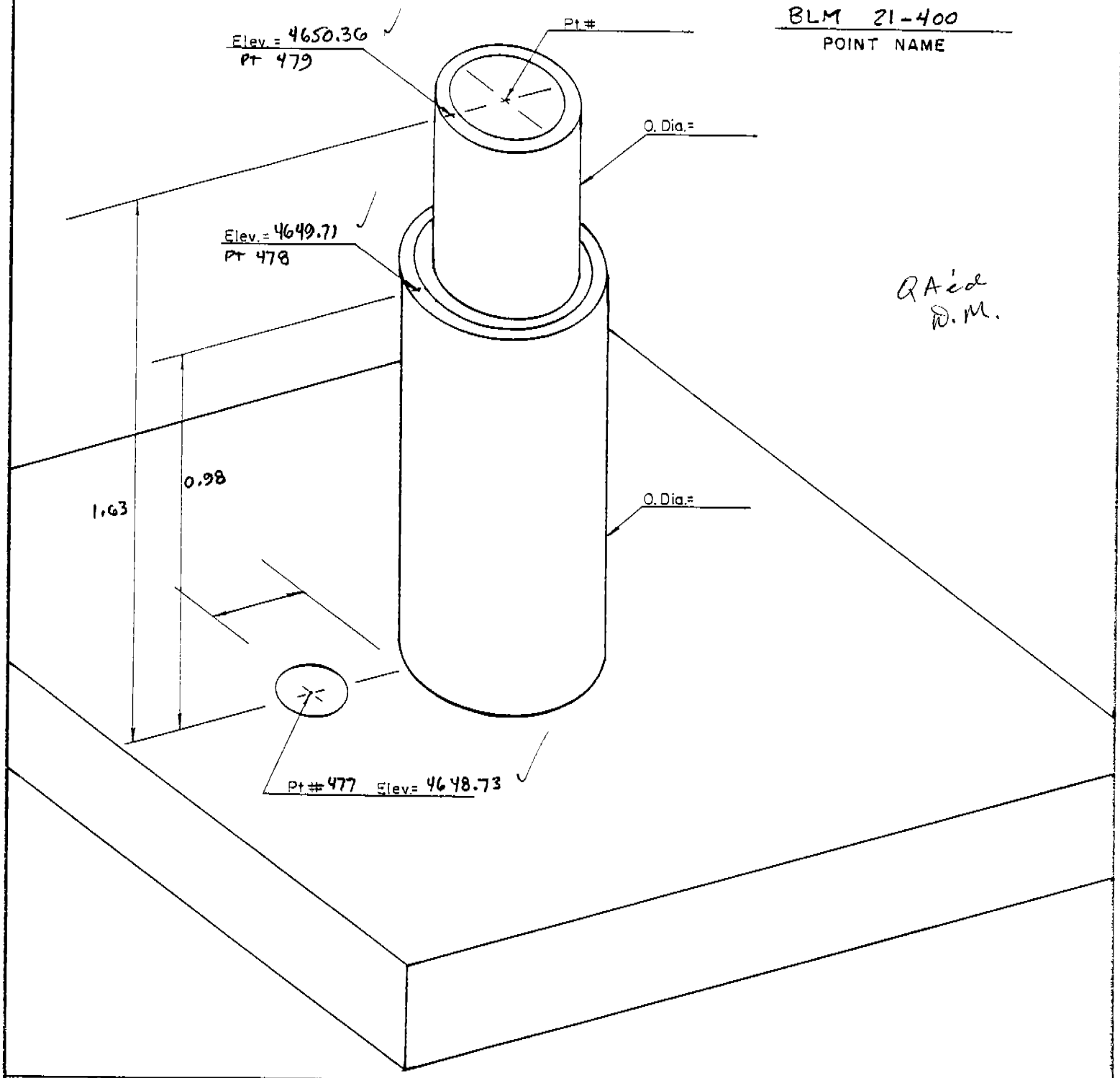


QA'd
D.M.

| COORD. TYPE | POINT # 477 | POINT # 478 | POINT # 479 | SCALE FACTOR | Δα |
|---|---|---|---|---|---|
| GEODETIC | LAT= 32°31' 10.246" | LAT= 32°31' 10.248" | LAT= 32°31' 10.249" | ——— | ——— |
| | LONG= 106°37' 49.845" | LONG= 106°37' 49.854" | LONG= 106°37' 49.855" | ——— | ——— |
| WSTM COORD. | X= 408,393.035 | X= 408,392.251 | X= 408,392.146 | SCALE= 0.9999846 | (-) 0° 09' 35" |
| | Y= 228,493.204 | Y= 228,493.442 | Y= 228,493.474 | GRID= 0.9997623 | |
| NM COORD | X= 382,713.76 | X= 382,712.99 | X= 382,712.90 | SCALE= 0.9999158 | (-) 0° 12' 16" |
| | Y= 552,915.58 | Y= 552,915.79 | Y= 552,915.89 | GRID= 0.9996935 | |

NM COORDINATE ZONE CENTRAL


**BOTSFORD LAND SURVEYING, INC.**
212 S. Downtown Mall
LAS CRUCES, NM 88001
**Phone 526-2444**