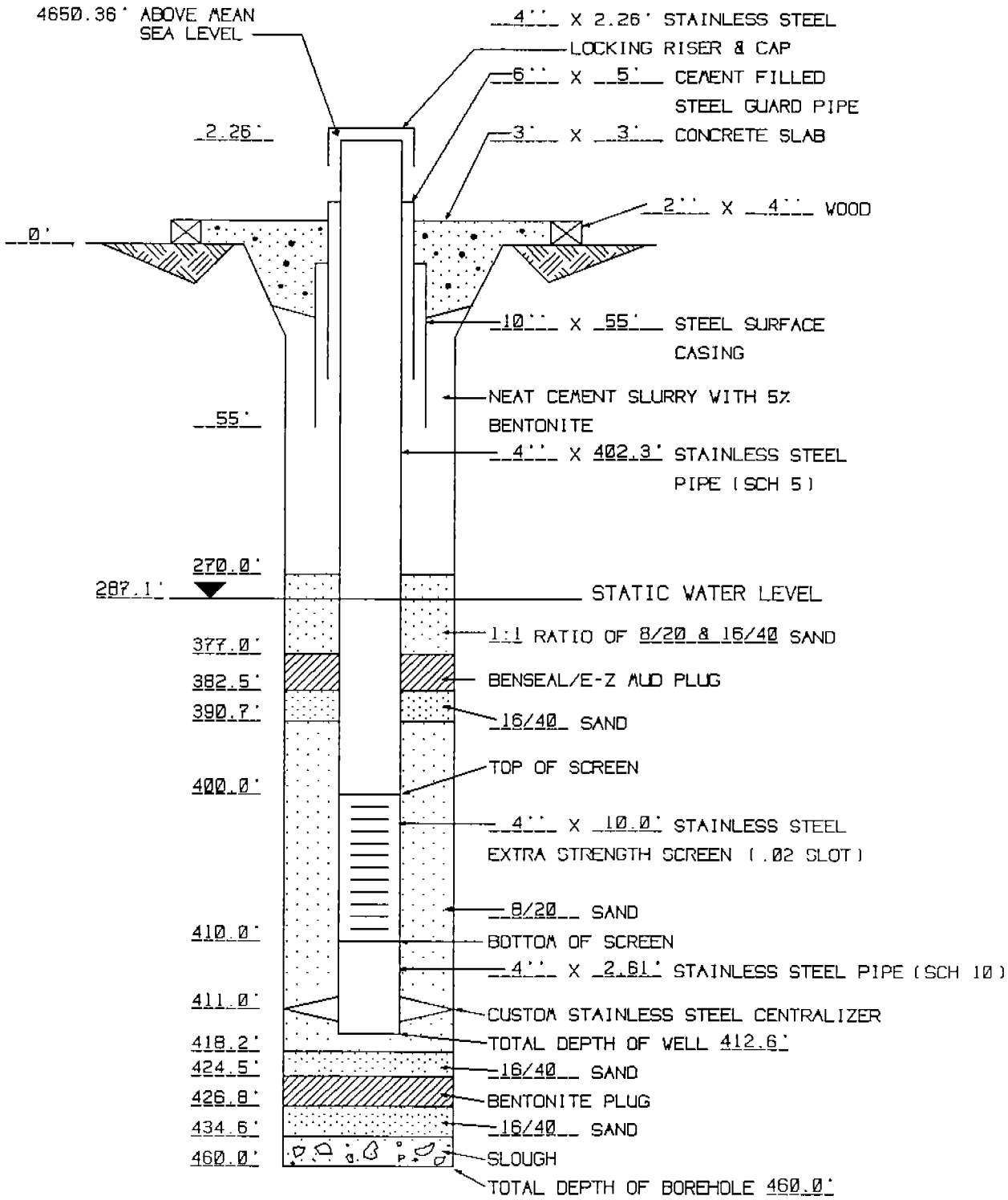

MONITOR WELL BLM-21-400 COMPLETION DIAGRAM