BLM -18-430
POINT NAME

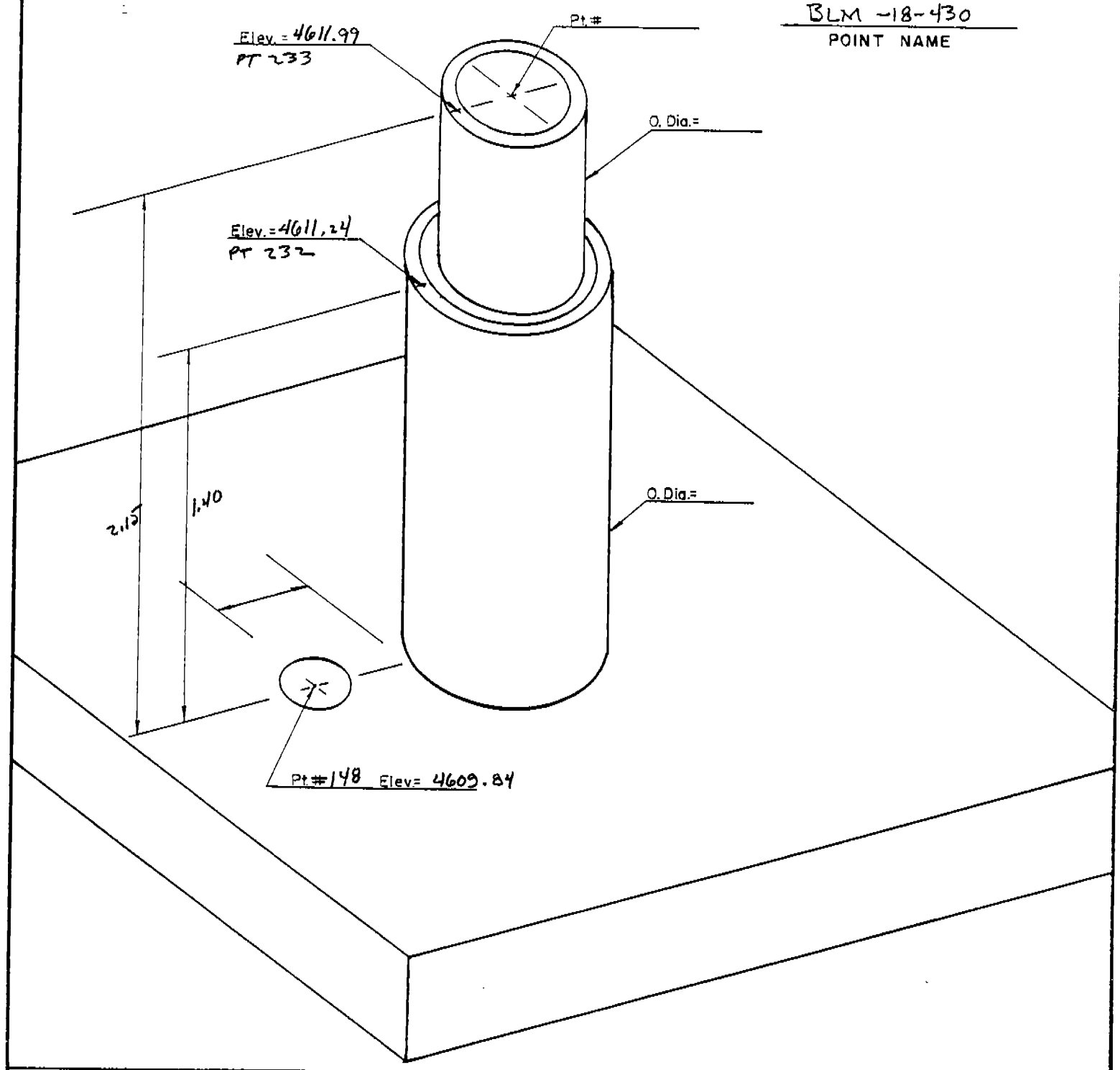

COORD. TYPE	POINT # 148	POINT # 232	POINT #233	SCALE FACTOR	Δα
GEODETIC	LAT= 32° 31' 41.628"	LAT= 32° 31' 41.621"	LAT= 32° 31' 41.620"	———	———
	LONG= 106° 38' 18.239"	LONG= 106° 38' 18.238"	LONG= 106° 38' 18.238"	———	———
WSTM COORD.	X= 405, 970.796	X= 405, 970.859	X= 405, 970.864	0.9999 856 SCALE	(-) 0° 10' 04"
	Y= 231, 671.528	Y= 231, 670.781	Y= 231, 670.721	0.9997 663 GRID	
NM COORD	X= 380, 294.204'	X= 380, 294.287	X= 380, 294.286	0.9999 164 SCALE	(-) 0° 12' 32"
	Y= 556, 095.565'	Y= 556, 094.858	Y= 556, 094.757	0.9996 960 GRID	

NM COORDINATE ZONE CENTRAL

BOTSFORD LAND SURVEYING, INC.
212 S. Downtown Mall
LAS CRUCES, NM 88001
Phone 526-2444