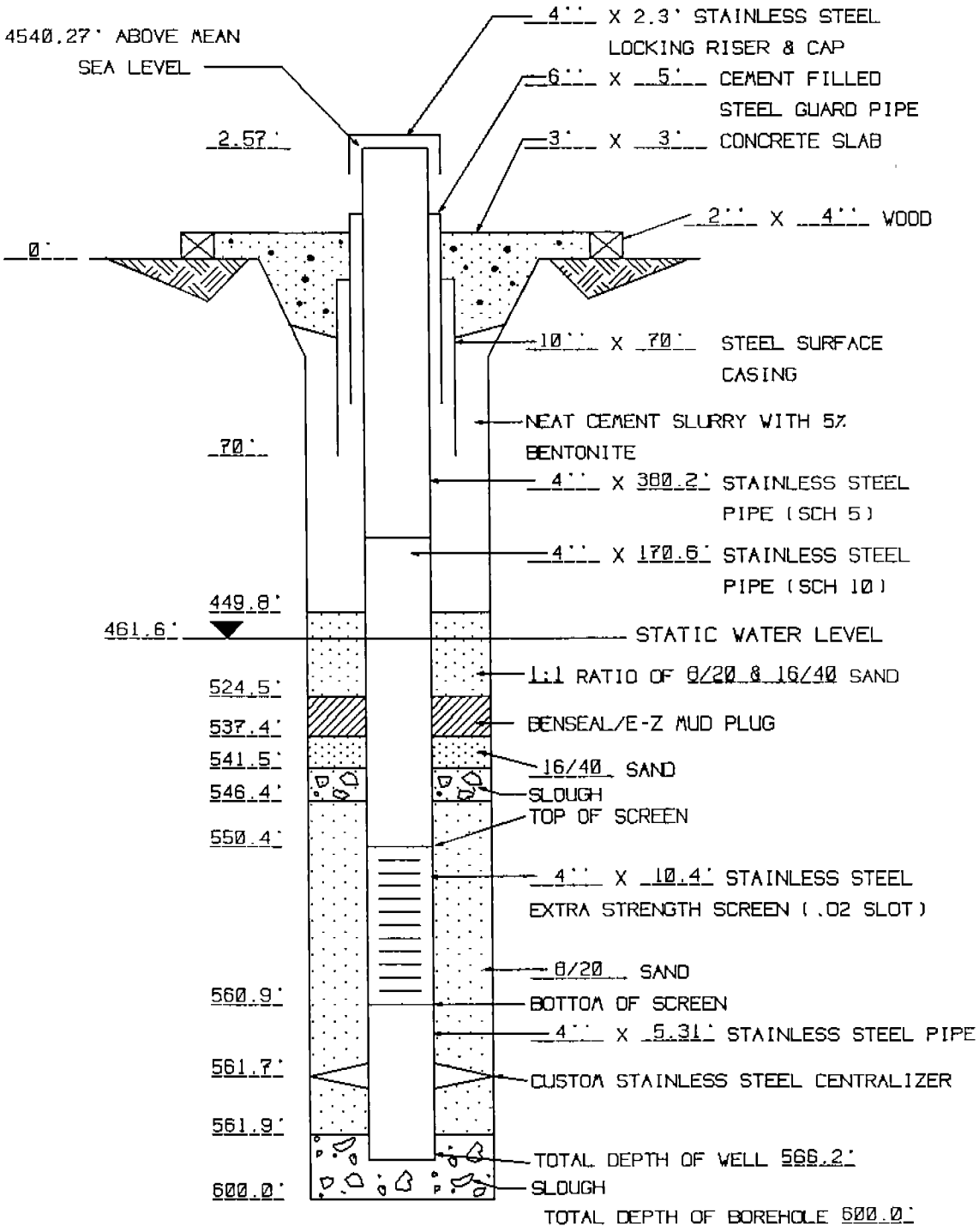

MONITOR WELL BLM-17-550 COMPLETION DIAGRAM