BLM-17-493

POINT NAME

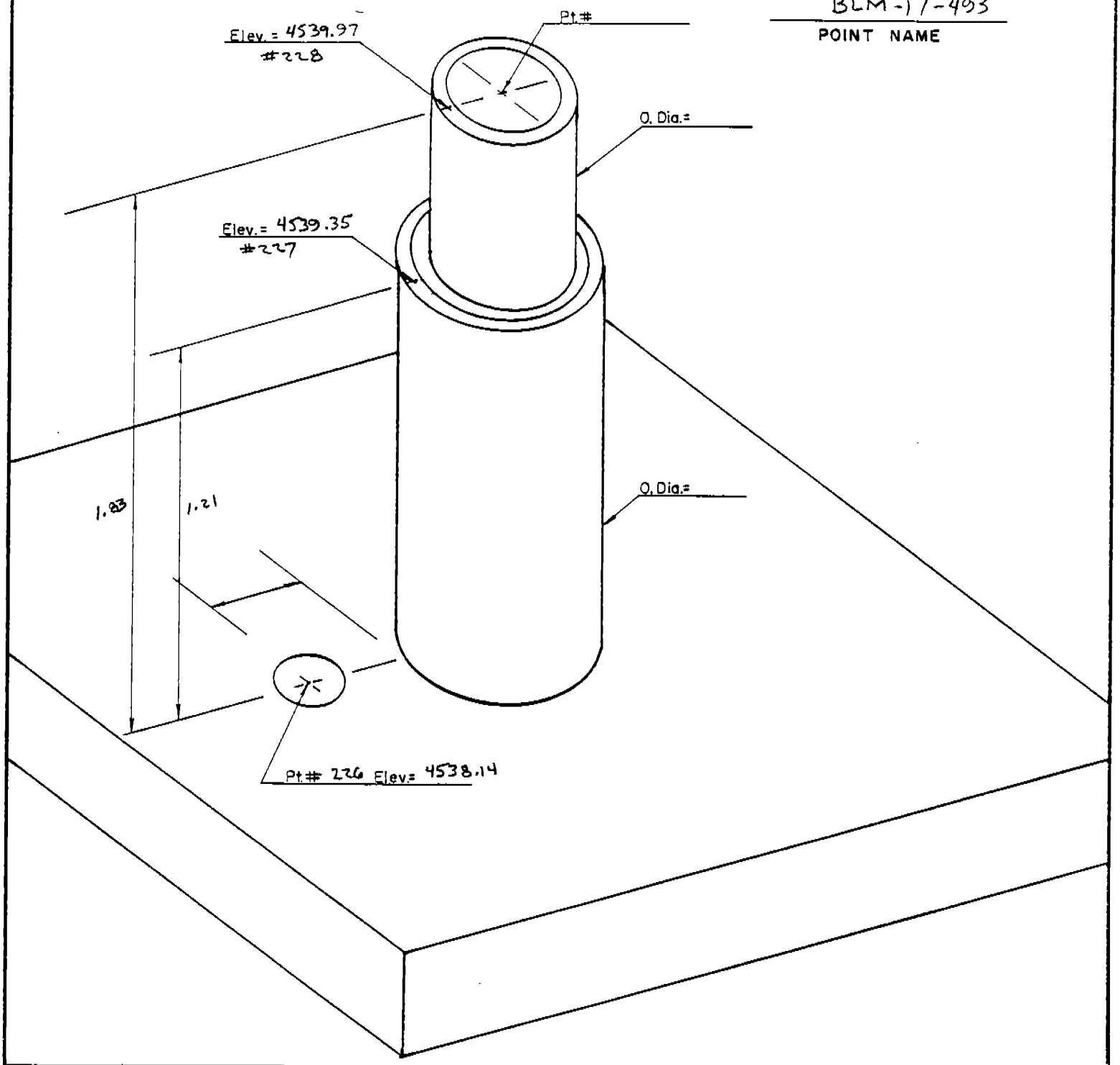

COORD. TYPE	POINT # 226	POINT # 227	POINT # 228	SCALE FACTOR	Δα
GEODETIC	LAT= 32°31'02.427"	LAT= 32°31'02.420"	LAT= 32°31'02.419"	—	—
	LONG= 106°38'52.402"	LONG= 106°38'52.403"	LONG= 106°38'52.403"	—	—
WSTM COORD.	X= 403,034.097	X= 403,034.041	X= 403,034.057	0.9999 858 SCALE	-0° 10' 09"
	Y= 227,718.392	Y= 227,717.704	Y= 227,717.581	0.9997 687 GRID	
NM COORD	X= 377,354.637	X= 377,354.548	X= 377,354.548	0.9999 172 SCALE	-0° 12' 50"
	Y= 552,145.018	Y= 552,144.311	Y= 552,144.210	0.9997 002 GRID	

NM COORDINATE ZONE CENTRAL

BOTSFORD LAND SURVEYING, INC.
212 S. Downtown Mall
LAS CRUCES, NM 88001
Phone 526-2444