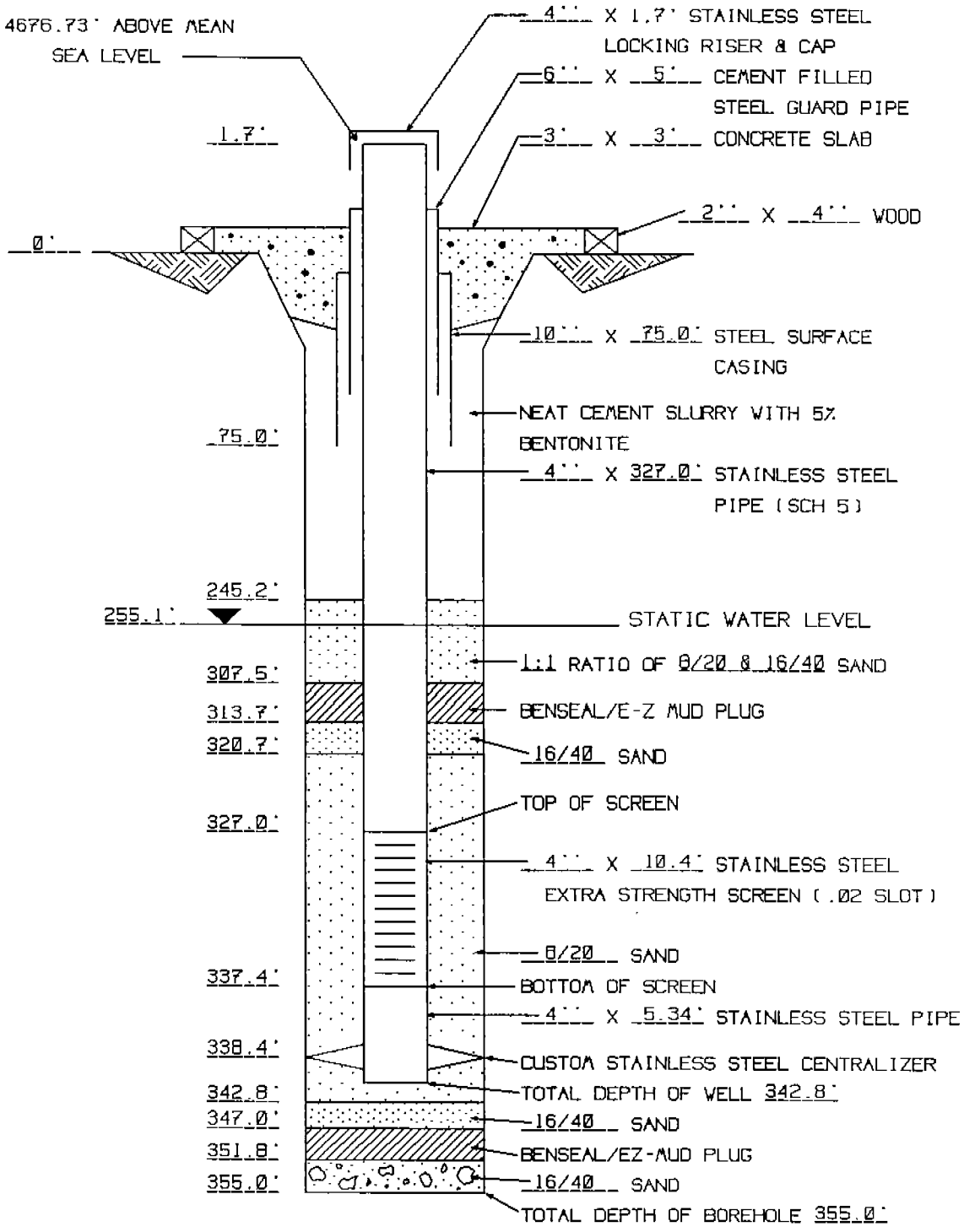

MONITOR WELL BLM-14-327 COMPLETION DIAGRAM