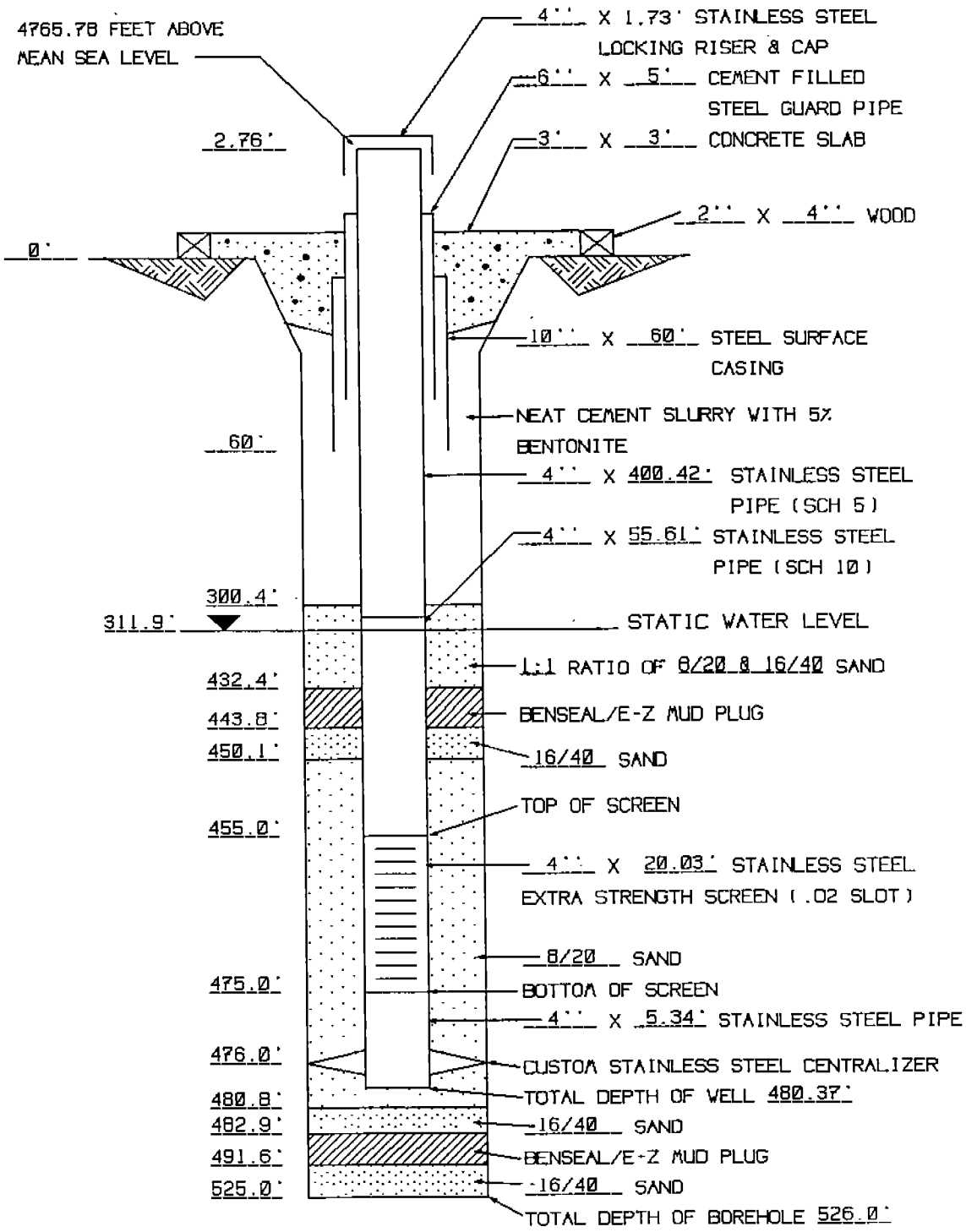

MONITOR WELL 700-F-455 COMPLETION DIAGRAM