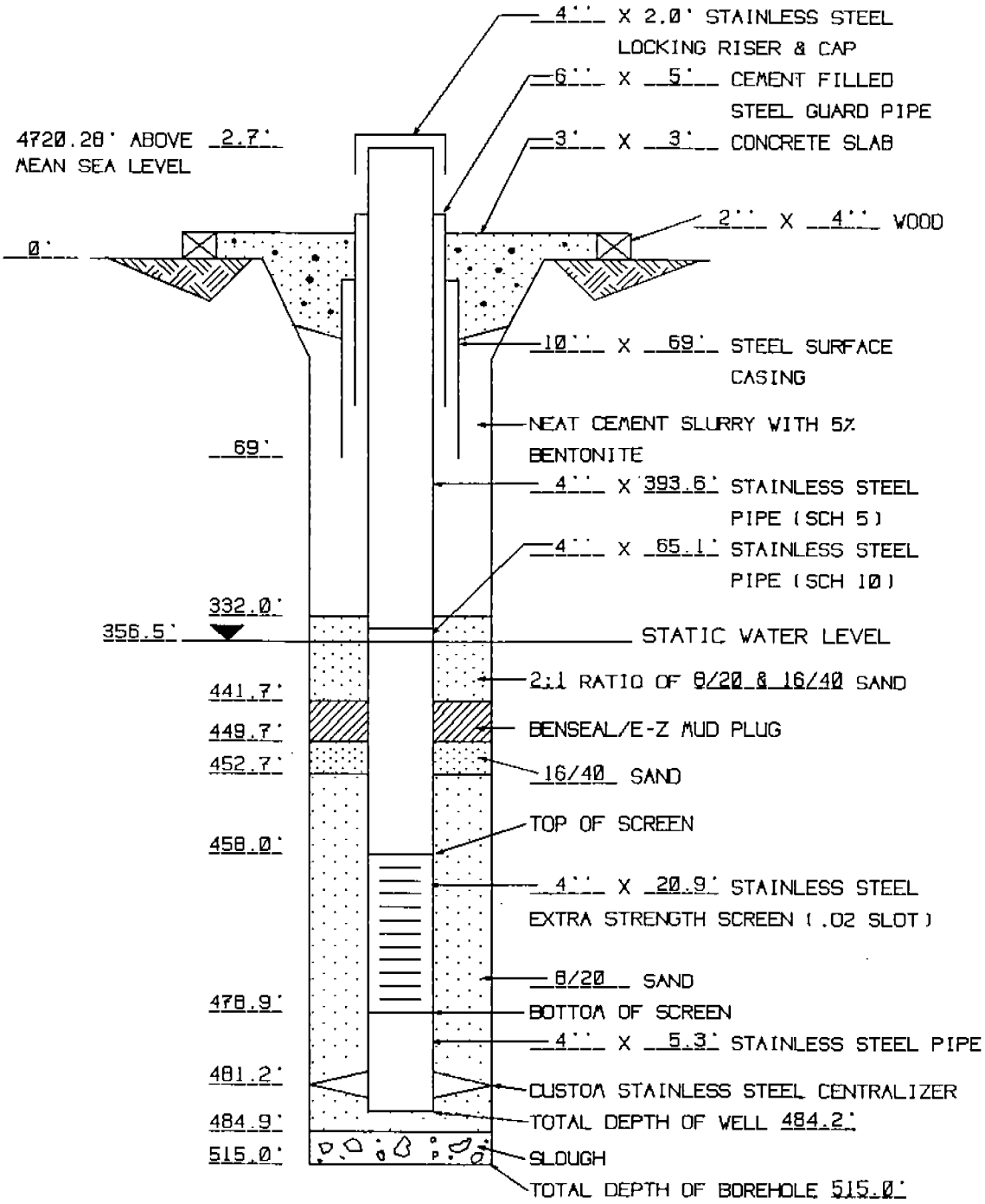

MONITOR WELL 700-E-458 COMPLETION DIAGRAM