700 - ~~0~~ 2D - 186

POINT NAME

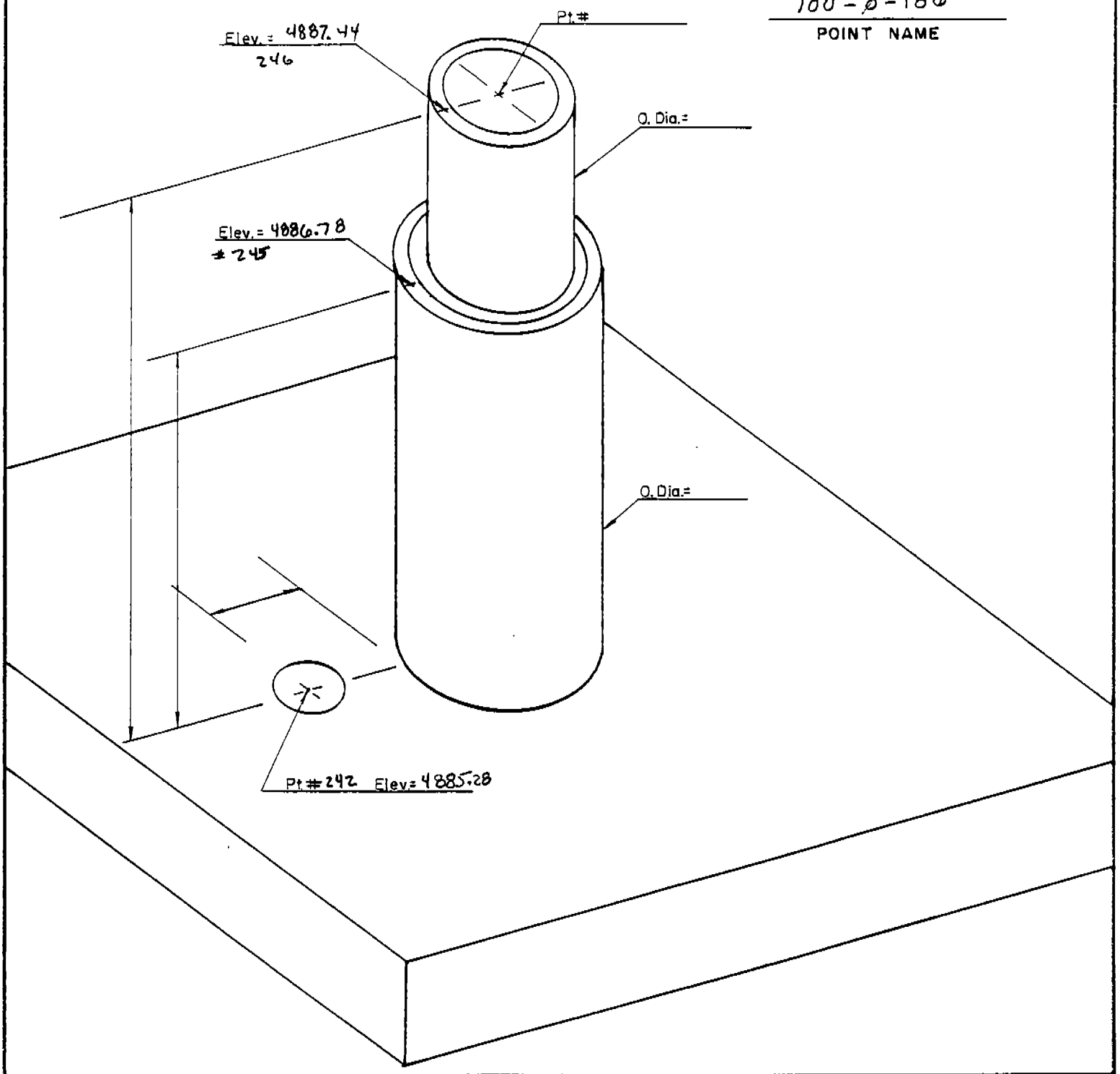

COORD. TYPE	POINT # 242	POINT # 245	POINT # 246	SCALE FACTOR	Δα
GEODETIC	LAT= 32° 32' 29.713"	LAT= 32° 32' 29.708"	LAT= 32° 32' 29.707"	———	———
	LONG= 106° 36' 07.436"	LONG= 106° 36' 07.439"	LONG= 106° 36' 07.439"	———	———
WSTM COORD.	X= 417,182.179	X= 417,181.954	X= 417,181.923	0.9999 829 SCALE	(-) 0° 08' 40"
	Y= 236,500.788	Y= 236,500.253	Y= 236,500.180	0.9997 485 GRID	
NM COORD	X= 391,508.608	X= 391,508.350	X= 391,508.349	0.9999 135 SCALE	(+) 0° 11' 22"
	Y= 560,915.738	Y= 560,915.234	Y= 560,915.132	0.9996798 GRID	

NM COORDINATE ZONE Central

BOTSFORD LAND SURVEYING, INC.
212 S. Downtown Mall
LAS CRUCES, NM 88001
Phone 526-2444