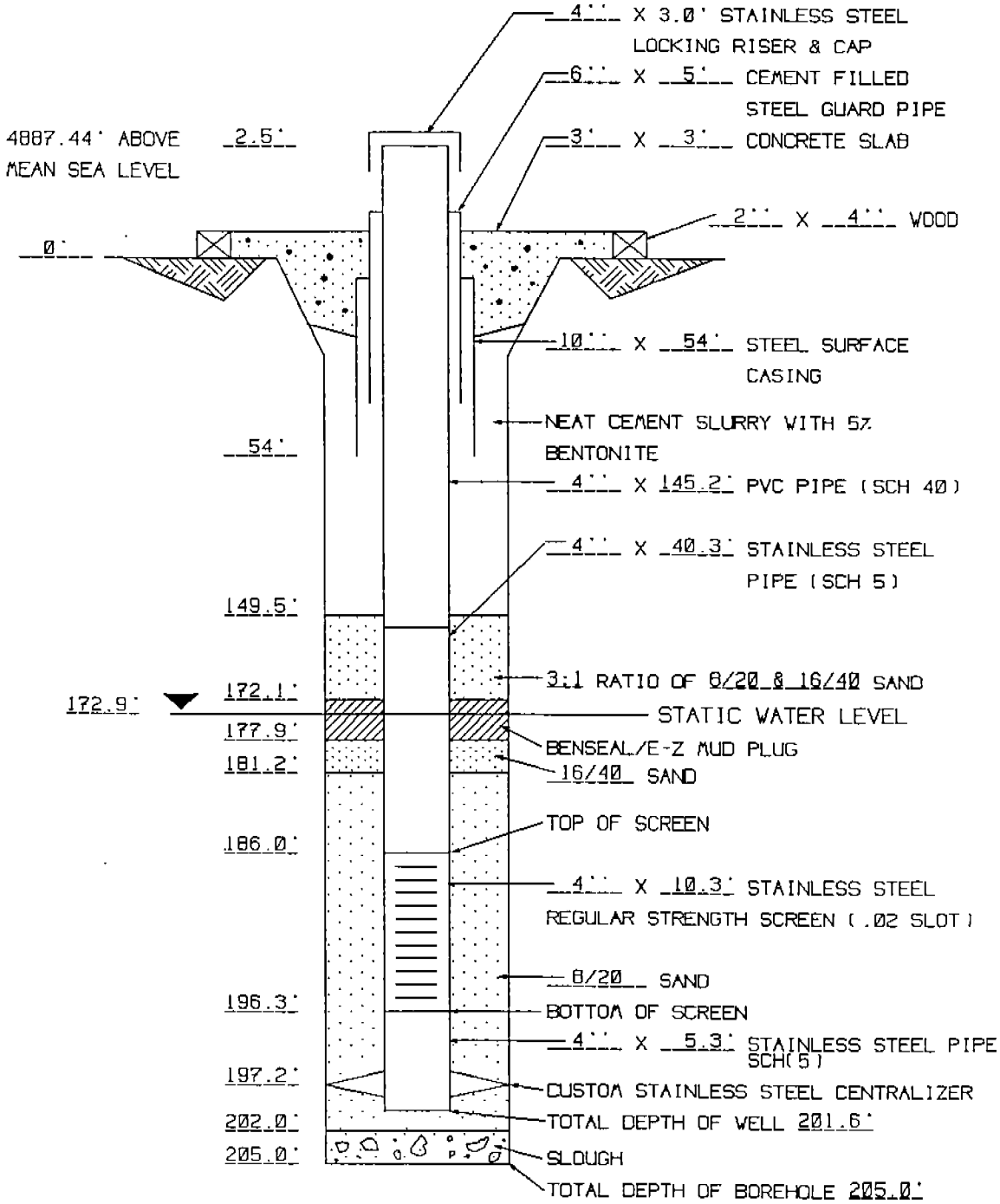

MONITOR WELL 700-D-186 COMPLETION DIAGRAM