700-A-253
POINT NAME

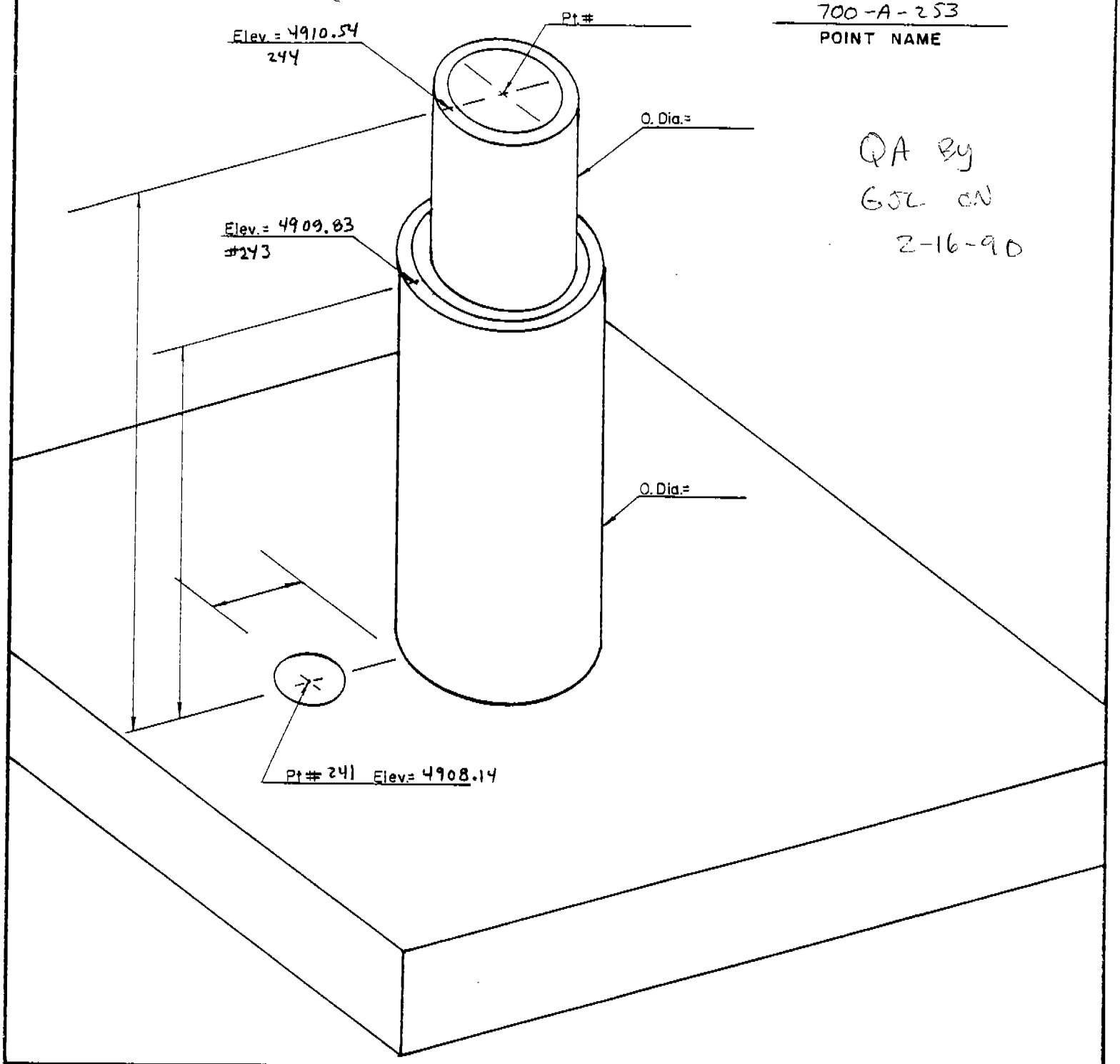

QA By
GJL on
2-16-90

COORD. TYPE	POINT # 241	POINT # 243	POINT # 244	SCALE FACTOR	Δα
GEODETIC	LAT= 32°32' 19.066"	LAT= 32°32' 19.060"	LAT= 32°32' 19.059"	———	———
	LONG= 106°36' 01.960"	LONG= 106°36' 01.965"	LONG= 106°36' 01.966"	———	———
WSTM COORD.	X= 417,648.321	X= 417,647.861	X= 417,647.810	0.9999 829 SCALE	(-)0°08'40"
	Y= 235,423.573	Y= 235,423.019	Y= 235,422.958	0.9997 485 GRID	
NM COORD	X= 391,973.811	X= 391,973.381	X= 391,973.295	0.9999 134 SCALE	(-)0°11'19"
	Y= 559,838.291	Y= 559,837.686	Y= 559,837.585	0.9996786 GRID	

NM COORDINATE ZONE CENTRAL

BOTSFORD LAND SURVEYING, INC.
212 S. Downtown Mall
LAS CRUCES, NM 88001
Phone 526-2444