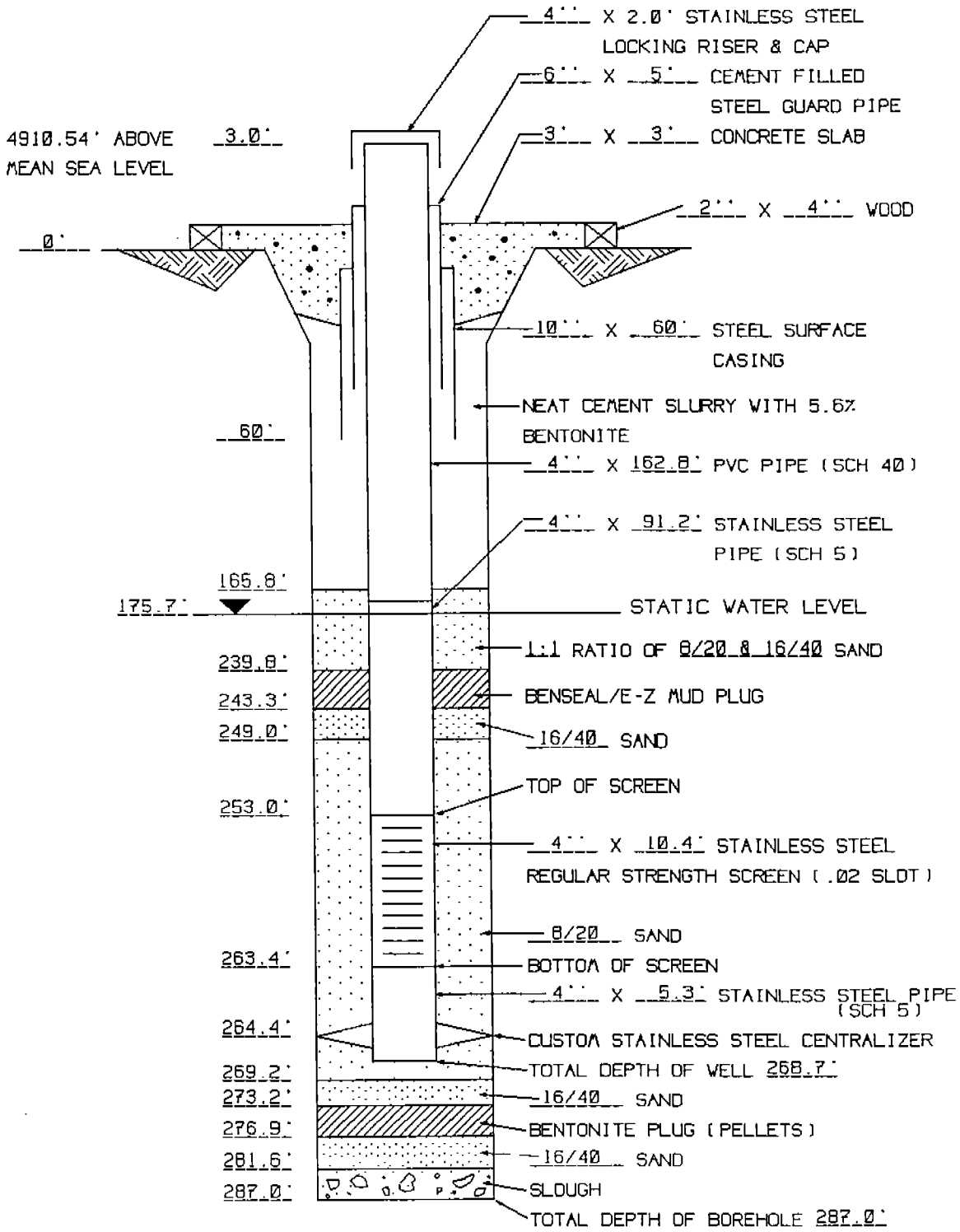

MONITOR WELL 700-A-253 COMPLETION DIAGRAM