WELL 300E
POINT NAME

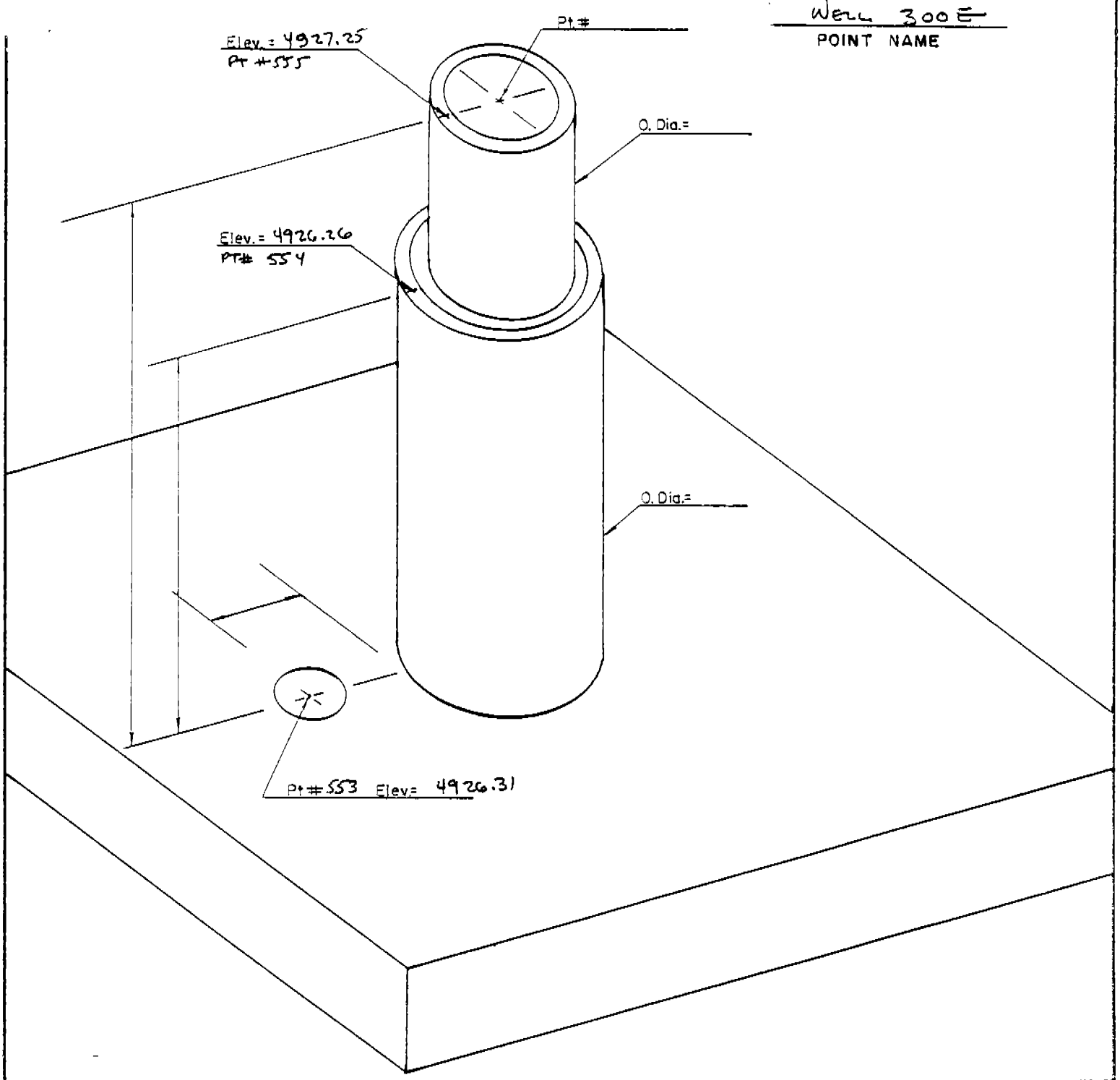

COORD. TYPE	POINT # 553	POINT # 554	POINT # 555	SCALE FACTOR	Δα
GEODETIC	LAT=32° 31' 34.00751"	LAT=32°31' 33.99942"	LAT=32°31' 33.99482"	———	———
	LONG=106° 35' 45.14468"	LONG=106° 35' 45.14319"	LONG=106° 35' 45.14034"	———	———
WSTM COORD.	X= 419,076.61	X= 419,076.74	X=419,076.93	SCALE =0.9999 825	(-)0° 08' 28"
	Y= 230,866.47	Y= 230,865.65	Y=230,865.19	GRID=0.9997 469	
NM COORD	X= 393,398.46	X= 393,398.59	X= 393,398.78	SCALE=0.9999 130	(-)0° 11' 10"
	Y= 555,280.34	Y= 555,279.52	Y= 555,279.06	GRID= 0.9996 774	

NM COORDINATE ZONE CENTRAL (NAD27)

BOTSFORD LAND SURVEYING, INC.
100 S. HADLEY AVE.
LAS CRUCES, NM 88001
Phone 526-2444