200-G
POINT NAME

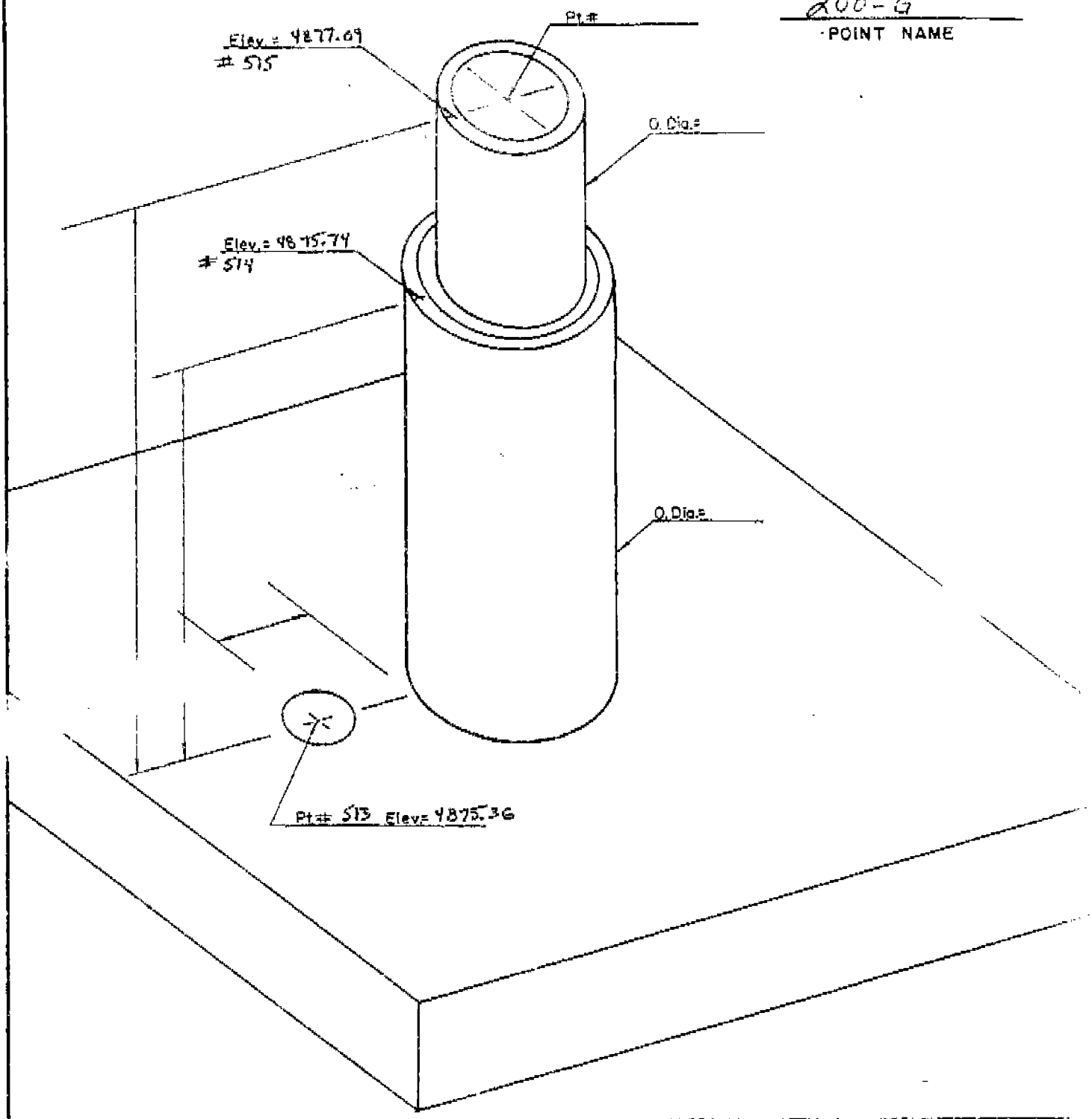

COORD. TYPE	POINT # 513	POINT # 514	POINT # 515	SCALE FACTOR	Δα
GEODETIC	LAT=32°31'02.05923"	LAT=32°31'02.05426"	LAT=32°31'02.05285"		
	LONG=106°35'58.07380"	LONG=106°35'58.07317"	LONG=106°35'58.08159"		
WSTM COORD.	X= 417,961.554	X= 417,961.093	X= 417,960.885	x=0.9999 827	(-)0°08'
	Y= 227,640.557	Y= 227,640.056	Y= 227,639.918	Grid=0.9997 496	
NM COORD	X= 392,280.96	X= 392,280.50	X= 392,280.29	SC= 0.9999 133	(-)0°11'16
	Y= 552,055.52	Y= 552,055.02	Y= 552,054.89	Grid=0.9996 802	

NM COORDINATE ZONE ~~NM~~ Central
NAD 27

BOTSFORD LAND SURVEYING
100 S. HADLEY AVE.
LAS CRUCES, NM 88001
Phone 526-2444