Westbay
Well Summary

Location ID: 200-F

Field Representative(s): K. Summers; G. Giles; M. Jacobs

Date Started: 07/12/94

Date Completed: 10/11/94

Northing: _____

Easting: _____

Brass Cap: _____ Outer Casing: _____ Inner Casing: _____

Drilling Method: Mud/Air Foam Rotary Drilling Contractor: Larjon Drilling Co.

Driller: J. Gower

Total Depth Borehole: 600' Total Depth Well Casing: 590'

Total Depth Surface Casing: 44'

Diameter Well Casing: 2" Diameter Surface Casing: 5"

Water Producing (packed-off) Intervals: 220' to 230'

Water Producing (packed-off) Intervals: 365' to 375'

Water Producing (packed-off) Intervals: 415' to 425'

Water Producing (packed-off) Intervals: 565' to 575'

Water Zone(s) Detected: 275' Water Level Open Borehole: 147'

Water Level Cased Borehole: N/A

Quik-Foam Use: 2,100 gallons

Estimated Water Use: N/A

Well Casing:

2in x 2ft SCD 80 PVC:		=		ft (stick-up)
2in x 5ft SCD 80 PVC:	12	=	60	ft
2in x 10ft SCD 80 PVC:	49	=	490	ft
5ft MP packer:	8	=	40	ft
Total SCD 80 PVC pipe:			590	ft

Regular coupling:	54
Pumping port coupling:	4
Measurement port coupling:	9
End cap: Top and bottom =	1
Casing Clamp:	1

Surface Casing:

94# bags cement: 10 bags

50# bags bentonite powder: 1 bags

85 gallons water.

Pertinent Field Notes:

07/14/94	Bedrock at 17'.
?/27/94	Possibly began producing water around 275'; possible fault zone at 295'; well producing at around 30 gpm.
?/28/94	Loss of circulation at around 330'.
?/04/94	At 360', rate of water production decreased from around 30 gpm to 5-10 gpm.

200 F
POINT NAME

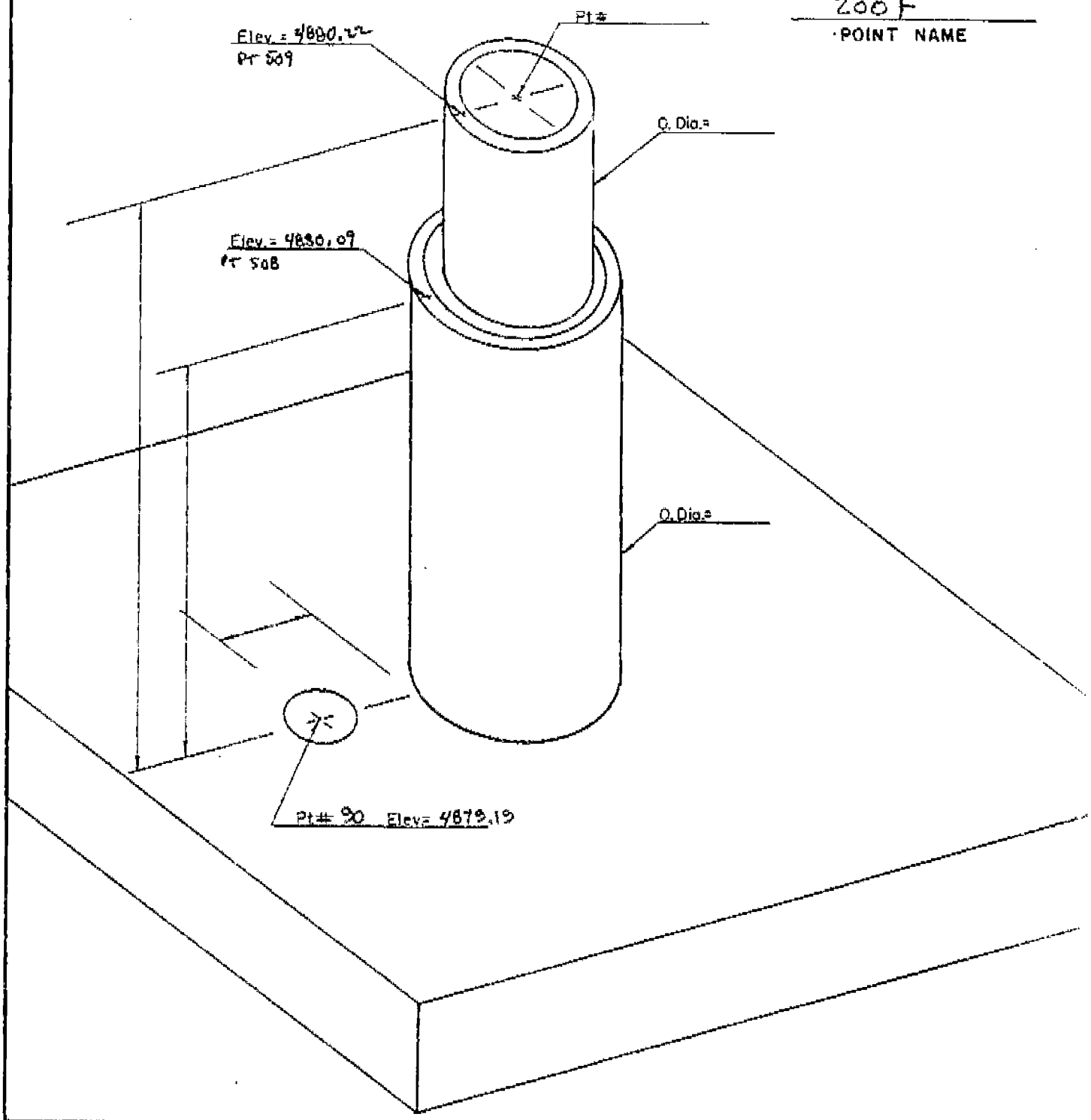

COORD. TYPE	POINT # 90	POINT # 508	POINT # 509	SCALE FACTOR	Δα
GEODETIC	LAT= 32°31' 04.96808"	LAT= 32°31' 04.96529"	LAT= 32°31' 04.96489"	———	———
	LONG= 106°36' 03.75408"	LONG= 106°36' 03.74409"	LONG= 106°36' 03.74266"	———	———
WSTN COORD.	X= 417,475.897	X= 417,476.75'	X= 417,476.874	SC= 0.9999 828	(-) 0°08' 38"
	Y= 227,935.741	Y= 227,935.457	Y= 227,935.416	GRID= 0.9997 495	
NM COORD	X= 391,795.57	X= 391,796.42	X= 391,796.54	SC= 0.9999 134	(-) 0°11' 19"
	Y= 552,351.07	Y= 552,350.78	Y= 552,350.74	GRID= 0.99996 801	

NM COORDINATE ZONE NM Central
NAD 27

BOTSFORD LAND SURVEYING, INC.
100 S. HADLEY AVE.
LAS CRUCES, NM 88001
Phone 526-2444