Well 200-C
POINT NAME

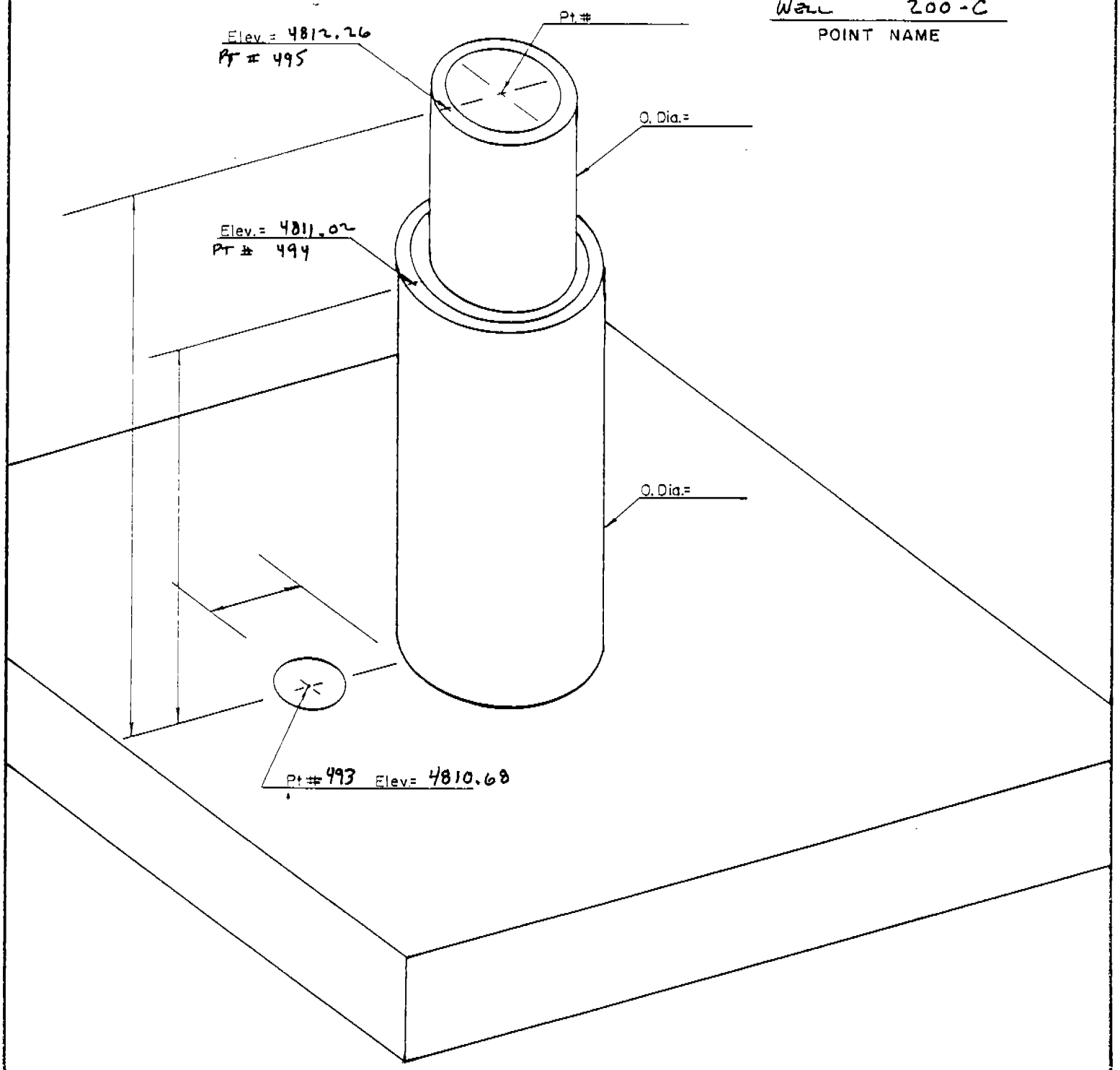

COORD. TYPE	POINT # 493	POINT # 494	POINT # 495	SCALE FACTOR	Δα
GEODETIC	LAT=32°30' 38.08058	LAT=32°30' 38.08716"	LAT=32°30'38.08811"	———	———
	LONG=106°36' 12.94522	LONG=106°36' 12.93499"	LONG=106°36' 12.93350"	———	———
WSTM COORD.	X= 416,681.988	X= 416,682.866	X= 416,682.994	Scale=0.9999 829	(-)0°08' 43"
	Y= 225,220.506	Y= 225,221.169	Y= 225,221.266	Grid=0.9997 528	
NM COORD	X= 390,999.59	X= 391,000.47	X= 391,000.60	Scale=0.9999 136	(-)0°11' 24"
	Y= 549,636.64	Y= 549,637.30	Y= 549,637.40	Grid=0.9996 835	

NM COORDINATE ZONE NM Central

BOTSFORD LAND SURVEYING, INC.
212 S. Downtown Mall
LAS CRUCES, NM 88001
Phone 526-2444