FAILURE ANALYSIS REPORT
100-B

August 7, 1989

Prepared for:

NASA WHITE SANDS TEST FACILITY
PO Drawer MM
Las Cruces, New Mexico 88004

Prepared by:

GEOSCIENCE CONSULTANTS, LTD

GCL - NASA WSTF OFFICE
PO Drawer MM
Building 101
Las Cruces, New Mexico 88004
(505) 524-5353
FAX (505) 524-5315

HEADQUARTERS
500 Copper Avenue, NW
Suite 200
A7buquerque, New Mexico 87102
(505) 842-0001
FAX (505) 842-0595

1.0 EXECUTIVE SUMMARY

Field data and volume calculations regarding the collapse of well casing in borehole 100-B indicate that brittle failure occurred as a result of borehole instability and/or pipe defects at a depth of 190 to 210 feet below land surface (bls). Grout volume calculations derived from field measurements indicate that the collapse strength of the pvc pipe was not exceeded at any point by. the amount of grout placed into the well annulus.

The primary cause of well collapse is attributed to borehole collapse and/or material defects. Borehole collapse during the grouting process in the 190 to 210 foot range would cause excessive local point stress on the pipe. Formation material forced against the well casing during pouring of grout could easily build pressure in the annulus and collapse the well casing. The amount of recovered pipe, 188 feet, suggests failure occurred near the last recovered pipe joint. Likewise, excessive drilling times at the bedrock/alluvium boundary at 210 feet below grade would promote borehole instability within the 190 to 210 foot range.

Defective well casing material caused as a result of manufacturing or transportation activities would significantly lower the strength capabilities of the pipe. Hairline fractures in the pipe would seriously effect the ability of the pipe to withstand grouting pressures. Damage due to weathering effects and UV deterioration can occur to PVC pipe, however, this is not considered to be a significant factor of pipe failure.

In order to attempt to avoid this type of occurrence in the future GCL is immediately taking the following steps:

- More careful pre-installation visual inspection of all casing
- Careful storage of PVC casing to prevent UV exposure and additional care during transportation of pipe to the well site
- Increased care in installation of casing

- Consideration of using materials of increased structural strength such as schedule 80 PVC or steel in holes that show tendency for borehole collapse

- Consideration of increasing 25% safety factor in holes with potential borehole instability

2.0 INTRODUCTION AND BACKGROUND

This report will provide detailed information concerning the failure of PVC pipe in well 100-B during the July 13, 1989 completion process. This discussion will concentrate on the pertinent chain-of-events that occurred prior to the accident, as well as possible causes for the failure of the well. The information present here is intended to advance the understanding of the events and causes of the casing failure in 100-B.

Monitor well 100-B was drilled to a total depth of 401' using a 9 7/8-inch diameter drill bit. The hole encountered dense andesitic volcanic rock at a depth of 210' bls (Appendix A). Water production was very limited upon reaching total depth. The borehole was left open for two weeks to monitor water levels and determine if well completion was feasible.

A decision was made to proceed with the well completion based on the marginal water production observed in the hole. A standard well design of 4-inch inner diameter, schedule 40 PVC/schedule 5 stainless steel was drafted for the well completion. Figure 1 shows the design parameters for the well. Materials for the well included both 20-foot and 10-foot lengths of PVC pipe. The 10-foot joints have been on-site for a period of 12 to 24 months. The 20-foot joints were purchased within the past 12 months.

Appropriate lengths of both PVC and stainless steel pipe were loaded and measured prior to entry into the borehole. No obvious defects in the PVC pipe were observed during this process. The total length of PVC used in the well was 284.5' with 260 consisting of older 10-foot joints (Figure 1).

After the filter pack, bentonite plug and overlying protective sand was set, the borehole was ready to grout. The top of the completion zone prior to grouting was 298.5' bls.

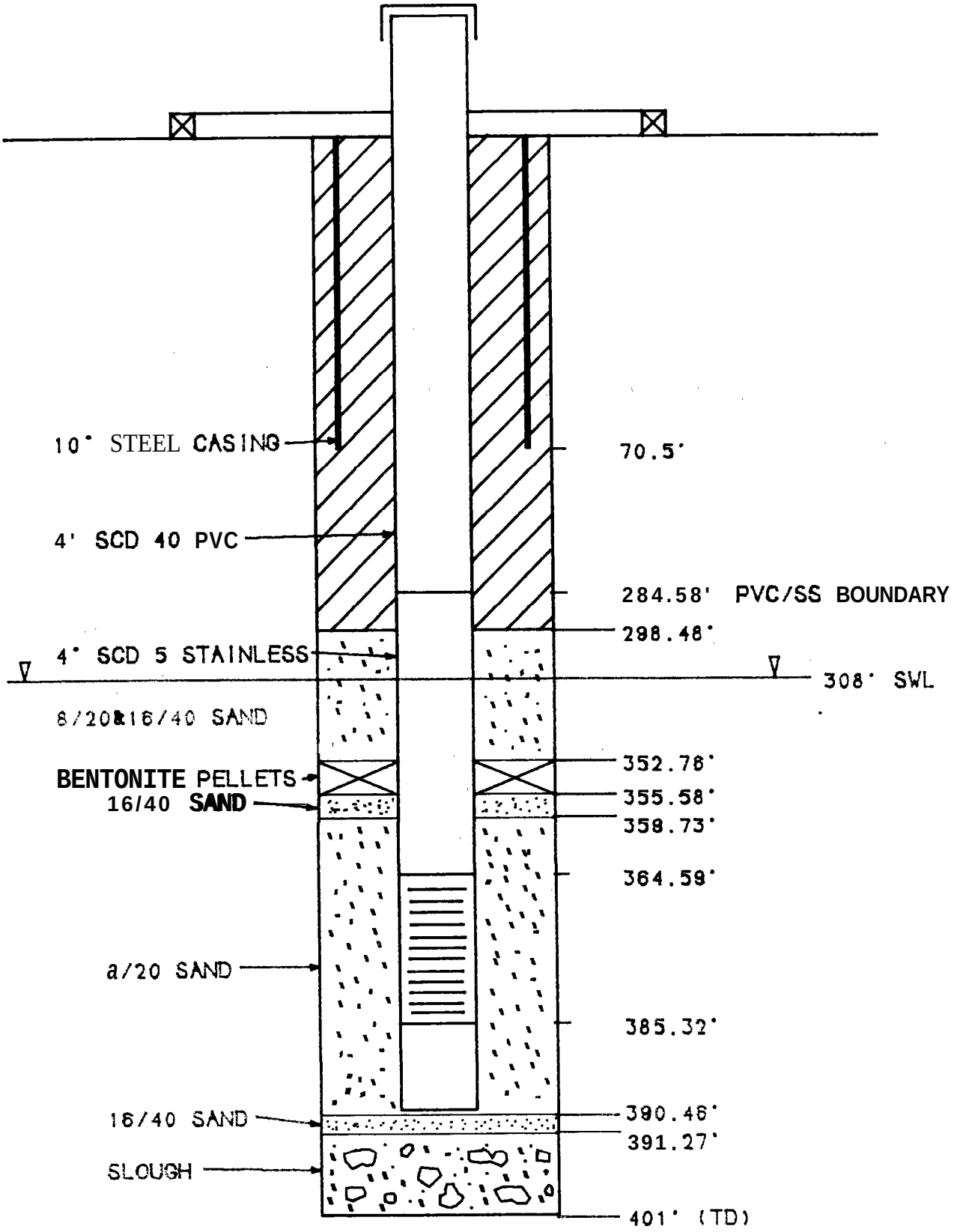

PRE-FAILURE DESIGN

FIGURE-1

Standard GCL procedures for grouting PVC/stainless steel combination wells require that up to 165' of 5 percent bentonite grout mixture be placed in the well annulus adjacent to Schedule 40 PVC pipe. This value allows for a 25 percent safety factor for the collapse strength of the PVC pipe. The maximum column of a 5 percent bentonite grout which Schedule 40 PVC pipe can withstand is approximately 221' using published pipe strength and slurry weight values (Appendix A). Typically a 5.6% bentonite cement mixture is made due to the actual volumes of the sacks of cement and bentonite. The 25% safety factor column height for this mixture is 168 feet and the maximum column height needed to equal the strength of the pipe is 223.5 feet. All wells are grouted using a staged process where single loads of grout are poured and allowed to cure 18 to 24 hours before additional loads are introduced into the well annulus.

3.0 WELL FAILURE ANALYSIS

A total of 90 sacks of cement and 10 sacks of bentonite were loaded and mixed in order to complete grouting of well 100-B. The mixture produced a load of 5.6% bentonite grout which has a slurry weight of 101.8 lb/ft^3 and a slurry volume of 1.69 ft^3/sack (Appendix B). The load was used to fill monitor well 100-E-261 to the surface and pour the initial load of grout into 100-B.

Grouting of well 100-E-251 to the surface required filling of **38** feet of cased annulus. This is equivalent to 10 bags of bentonite grout as demonstrated in Appendix A. The remaining load of grout (approximately 80 bags) was moved to the 100-B well site.

After approximately 80 percent of the remaining grout in the truck was emptied into the well (well-site geologist estimate) an audible "pop" was heard originating from inside the borehole. The well at the surface fell roughly 6' into the hole and then rebounded 20' into the air. A pulling unit was immediately set up and well pipe was pulled from the hole. A total of 188' of PVC pipe was recovered from the hole. Figure 2 shows the post-failure conditions of the well pipe. Figure 3 is a photo of the PVC failure at 188'. Fragment of PVC pipe were "shot" up the inside of the pipe and bridged within the recovered pipe. Fragments ranged from less than an inch to nearly 1 foot in size and consists of both smooth pipe and threaded joint pieces. Figure **4** is a photo of some of the recovered fragments. All attempts to recover the remaining pipe in the hole failed.

Measurement of the post-failure level of grout in the borehole indicated a grout level 145 to 150 feet bls. A more accurate measurement could not be obtained due to the fluid nature of the uncured grout. The following day, a depth of 106 feet bls was measured for the grout and slough that caved into the hole as a result of pipe fishing activities and borehole instability (Figure 2).

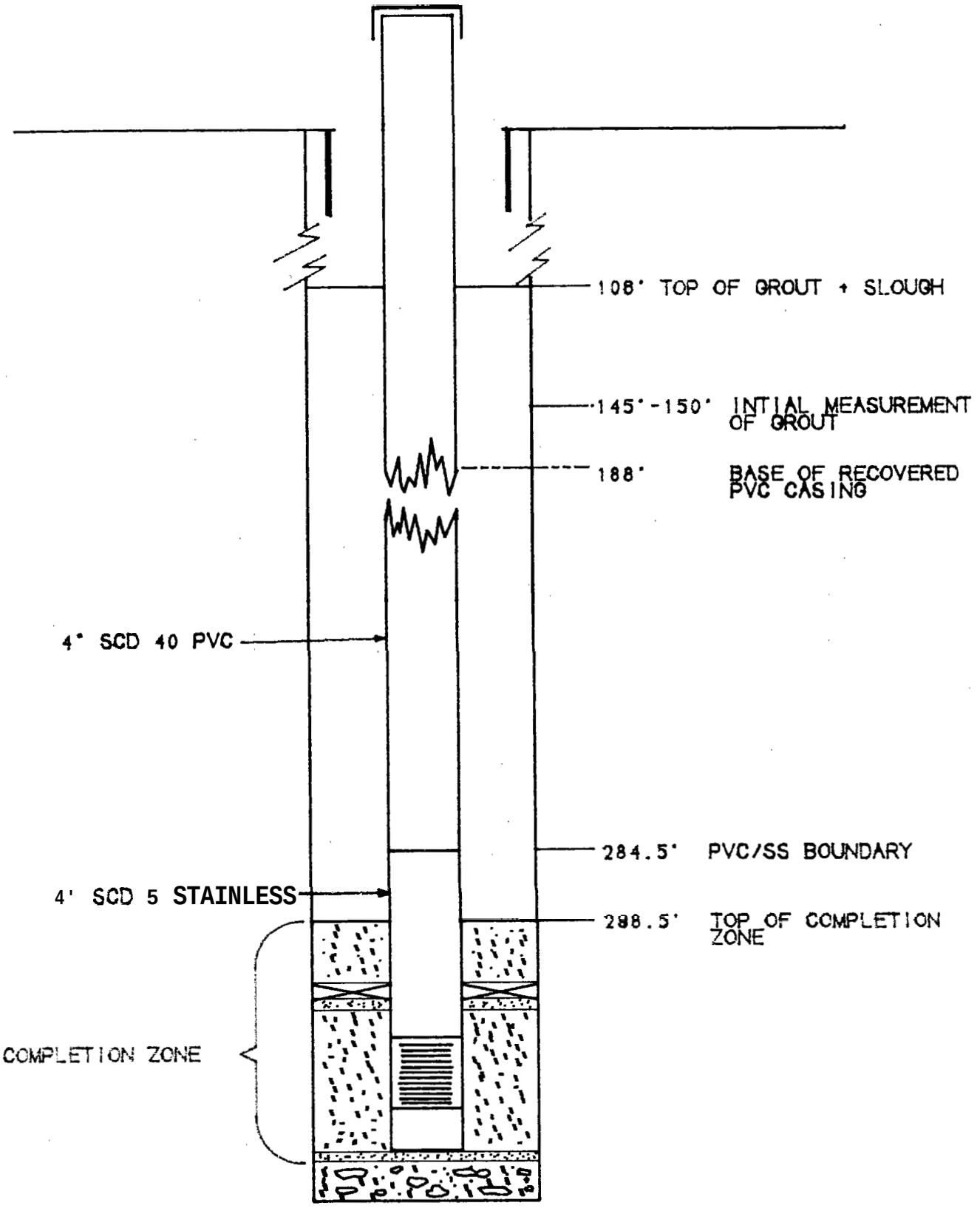

POST-FAILURE DATA

FIGURE-2

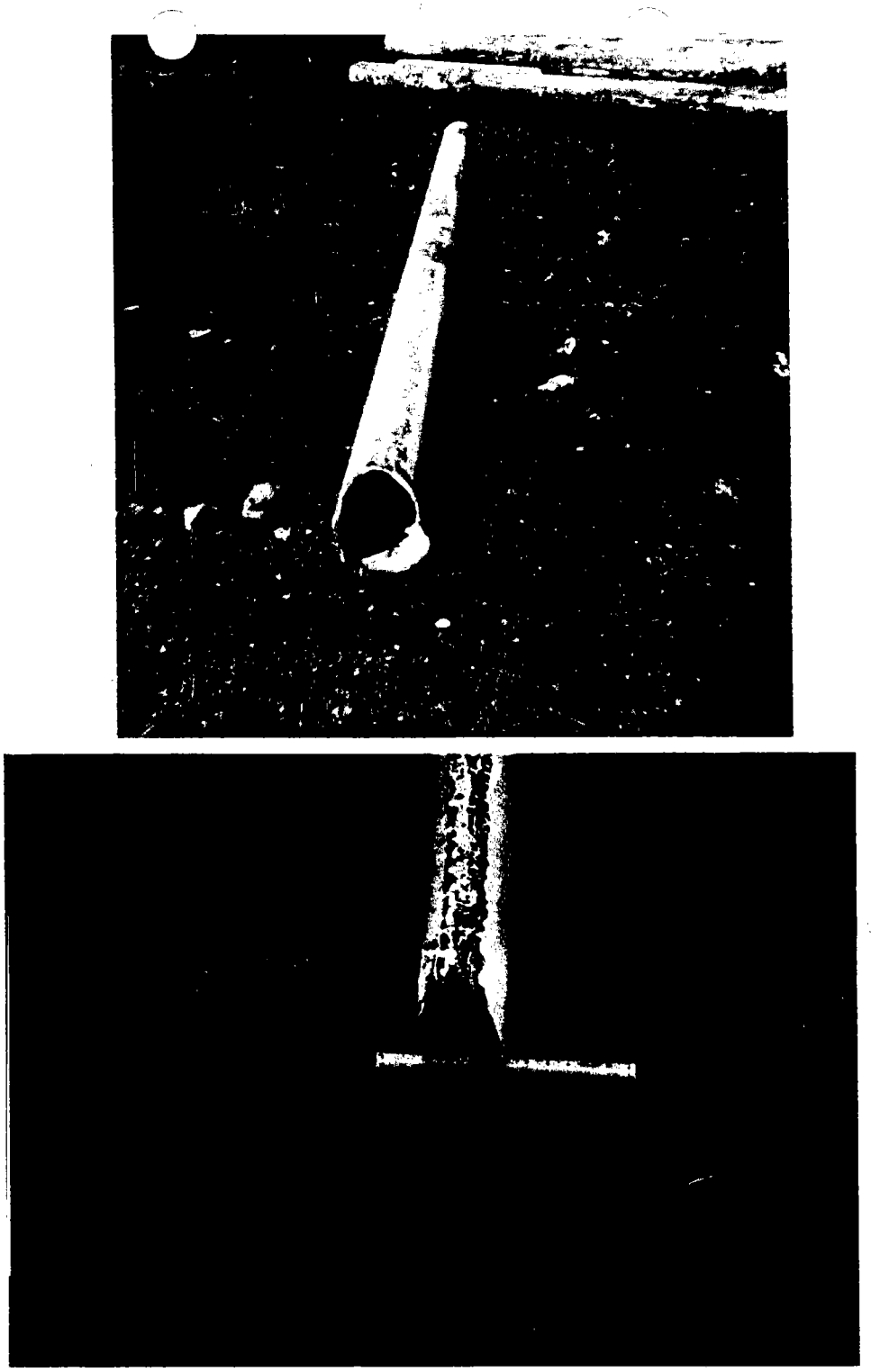

FIGURE 3

LAST RECOVERED PVC JOINT FROM WELL 100-B
180 - 188 FEET

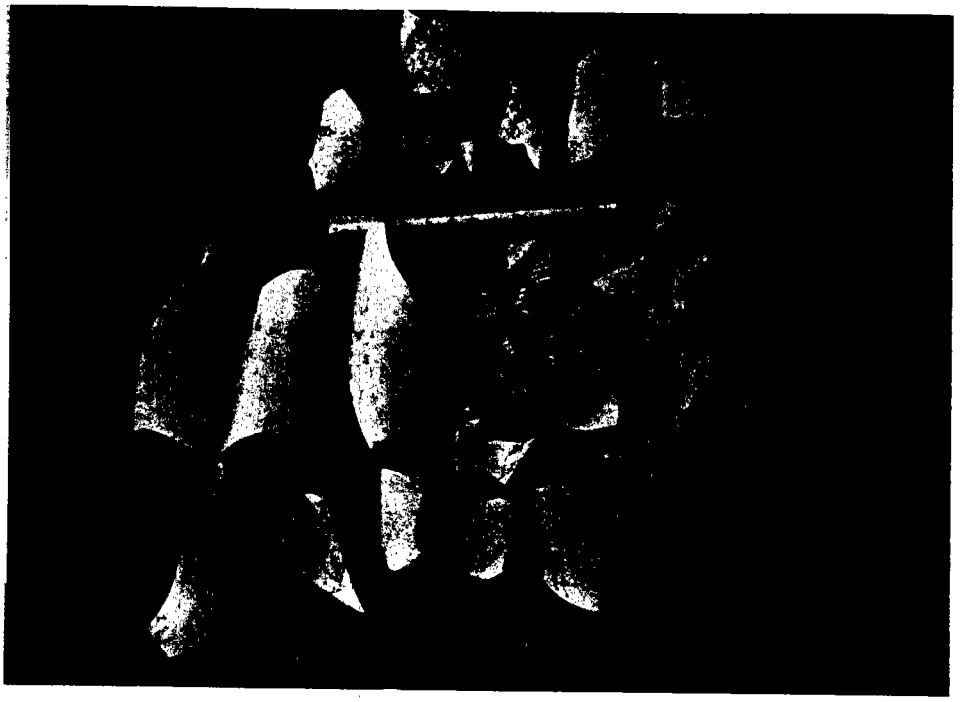

FIGURE 4

FRAGMENTS OF PVC PIPE
RECOVERED FROM WELL 100-B

From the field evidence and observations, GCL has determined that well failure occurred between 188 and 210 feet bls. The following evidence was used to establish the depth where failure occurred:

- 188' of undamaged PVC casing was recovered from the borehole. Failure must have occurred within 20 to 30 feet of the depth of the last recovered pipe.
- Increased drilling time which occurred at the top of bedrock (201' bls) caused excessive formation damage in the overlying alluvial section immediately above 210' bls (Appendix A). Formation washouts caused by extended borehole/drilling stabilizer interaction and high pressure air-foam fluid flow could easily create unstable borehole conditions in the overlying alluvial section.
- Excessive formation damage in 100-B is supported by documented sloughing in the borehole.
- Grout column height calculations indicate that the collapse strength of the PVC pipe was not exceeded in deeper portions of the borehole.

Pipe failure most likely occurred as a result of borehole collapse during the grouting process and/or failure of a defective section of PVC casing. Given the depth of failure correlates with the approximate depth of the bedrock/alluvium contact, and the potential formation damage caused by drilling, caving of cobble to boulder-size fragment may have caused casing failure. Bridging of rocks against the PVC pipe could cause excessive point pressures to be applied to a limited portion of pipe as grout is poured into the hole, Such localized pressures could exceed the collapse strength of the PVC pipe at the bridged point. Borehole failure could also directly damage the pipe as material falls through the well annulus.

Defective well casing, resulting from manufacturing, transportation or installation processes may have also contributed to well failure. Hairline fractures in the pipe surface or threaded joints caused by a manufacturing defect, such as poor casting, could greatly reduce the collapse of the pipe. Undetectable damage caused to materials during transportation to the facility or well site could cause similar results

to that observed at the 100-B well site. Potential weakening of PVC pipe due to age or ultra violet (UV) damage is possible, however, this is not considered to be a primary cause of well failure. Discussions with Mr. Bi 11 Schafer of Johnson Screens revealed that age or UV damage to PVC pipe is possible, but he has never heard of this to have caused well failure. PVC materials at NASA are covered in the cardboard shipping boxes until opened for use. Some joints have been exposed to the elements in the past. The age of PVC pipe on-site ranges from 12 to 24 months.

Calculations of the column height of grout in 100-B prior to failure indicates the amount of grout. placed in the hole did not exceed the collapse strength of the PVC pipe (Appendix B). The maximum column of a 5.6% bentonite grout that Schedule 40 PVC pipe can withstand is 223.5 ft (Appendix B). The calculated pre-failure grout column above the deepest PVC joint in 100-B (284 feet bls) is 154 feet. This is equivalent to a 31% collapse safety factor for the strength of the PVC pipe. These values represent a condition where no grout entered the well below 200 feet bls as a result of a PVC bridge in the well casing (Figure 5a). This condition is possible because a significant PVC bridge was found in the casing recovered from the borehole, hence, it is possible that a similar bridge formed in the casing left in the borehole, If the well did fill with grout (Figure 5b), the pre-failure column height above the last PVC joint is 187 feet. This represents a 16%collapse safety factor for the PVC pipe. The amount of grout lost to formation invasion and borehole irregularities is estimated to be 32% and 19%for the two cases respectively. Both invasion loss values are within normal observed values for boreholes at WSTF. The invasion/borehole loss volumes are also considerably less than the 53% loss documented in well 100-E-261 which had similar drilling conditions to borehole 100-B. These calculations indicate that downhole grout pressures could not have caused casing collapse at depths below the 188 to 210 foot bls range where collapse is believed to have occurred.

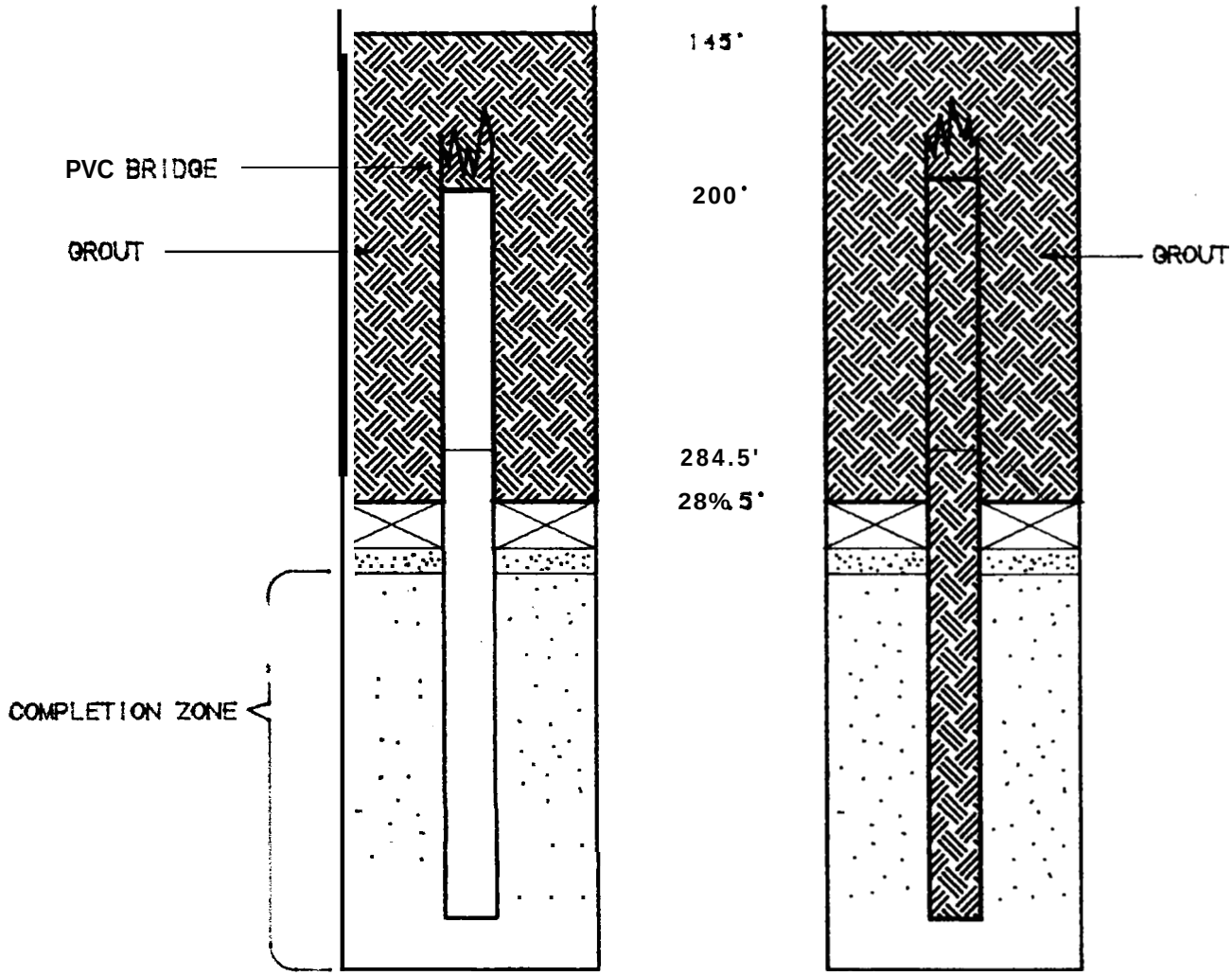

FIGURE-5A
NO GROUT INVASION INTO WELL

FIGURE-5B
COMPLETE GROUT INVASION INTO WELL

FIGURE 5
100-B DIAGRAMATIC GROUT MODELS

4.0 CONCLUSIONS

1. Catastrophic casing failure of the schedule 40 PVC casing in 100-B occurred between 188' and 210' bls.

2. Unstable borehole conditions were likely at the 190' - 210' level bls due to the nature of the alluvial/bedrock contact and slow bedrock penetration rate while drilling.

3. The casing failure at 188' - 210' bls resulted from either one or a combination of the following factors:

   - Visually undetectable manufacturer's defect in casing between 188' - 210' bls

   - Visually undetectable damage to casing during shipment to site or transportation to borehole

   - Hole collapse and/or bridging in the zone between 188'-210' bls.

4. The collapse strength of standard Schedule 40 PVC pipe was not exceeded at any point in the well by the amount of grout placed in the hole.

5.0 RECOMMENDED CHANGES IN PROCEDURE

In order to avoid similar occurrences to the extent possible, GCL proposes the following considerations and modifications to the drilling and completion procedure:

1. More careful pre-installation visual inspection of all casing.
2. Careful storage of PVC casing to prevent excessive UV exposure.
3. Continued care in the installation of casing joints into the borehole.
4. Consideration of using materials of increased structural strength such as schedule 80 PVC or steel in holes that show tendency for borehole col1apse.
5, Consideration of increasing 25% safety factor in holes with potential borehole instability.

NASA\100BFAIL.RPT

APPENDIX A

DRAFT

LITHOLOGIC LOG

LOCATION MA?:

SITE ID: NASA-WSTF LOCATION ID: 100-B-*

SITE COORDINATES (ft.):

N E

GROUND ELEVATION (ft. MSL):

STATE: NEW MEXICO COUNTY: DOÑA ANA

DRILLING METHOD: Mud/Air Foam Rotary

DRILLING CONTR.: Larjon Drilling Company

DATE STARTED: 06/07/89 DATE COMPLETED: 07/12/89

SE 1/4 SE 1/4 SE 1/4 SE 1/4 S 3 T 21S R 3E

FIELD REP.: P.S. Egan / J.F. Kirby

COMMENTS: 16" borehole to 70.5', 10" surface casins set to 70.5'. 9 7/8" borehole. 70.5'-401' (T.D.). Bedrock encounterec

LOCATION DESCRIPTION: at approx. 210'. T.D. at 401'. Casing failed during grouting; well plugged and abandoned.

Depth	Visual %	Lith	Drilling Time Scale: min	Sample Type and Interval		Lithologic Description
			0'-72' Timed by driller every 20'	Cuttings 0'-401'	0'-210'	Alluvium (Santa Fe Group). Dark grey (N3) to yellowish orange (10 YR 6/6) cuttings, moderate yellowish brown (10 YR 5/4) clay; cuttings range in size from less than 0.1 inch to 0.5 inches, are angular to subrounded and poorly sorted. Natural grains are clay. silt, and fine, subrounded sand. This lithologic unit is an unconsolidated to consolidated polygenetic pebble to boulder conglomerate. Lithology of cuttings are: light gray (N7) to grayish black (N2) micritic limestone. white (N9) rhyolite exhibiting rims of iron stains around mafic phenocrysts (sometimes oxidation has pervaded entire cutting coloring it pink to dark red), dusky red (5 R 3/4) to grayish olive (10 Y 4/2) siltstone, white (N9) to 1ight olive gray (5 Y 6/1) to grayish orange (10 YR 7/4) quartzite and chert, dark grey (N3) to very dusky red (10 R 2/2) aphanitic, microporphyritic, and porphyritic andesite; Phenocrysts of plagioclase in andesite sometimes altered to green epidote, and lesser amounts of reddish granite, yellowish brown sandstone, and caliche as both cuttings and coating on other cuttings. Comnents: The upper 20' of this section is bouldery and contains some caliche hard-pan layers and caliche-cemented alluvium. Thin clay lenses (layers) are present but decrease in frequency with depth. Decreased penetration rates with depth are interpreted as increased induration of alluvium in the deeper section. The percentage of very dusk red (10 R 2/2) andesite in cuttings also increases with depth unti1 andesite bedrock is encountered at 210'.
5						
10			45 (0-12')			
15						
20						
25						
30			64 (12'-32')			
35						
40						
					0'-20'	Very bouldery. Signs of caliche in cuttings. Very slow drilling. Cuttings are small and fairly uniform (0.2 inches) average diameter.
45			38 (32'-47')			
					20'-25'	Clayey alluvium.
50					25'-45'	Increase average cutting size to 0.4 inches.

Depth	Visual X	Lith	Drilling Time Scale: min	Sample Type and Interval		Lithologic Description
				Cuttings (cont'd)		
50						
55						
60			70 (47'-62')			
65						
70			47 (62'-72') Start Drillograph		70'-75'	Most of the sample contains cuttings of grout.
75			6			
80			7			
a5			5			
90			11			
95			6		95'-105'	Increase in average cutting size to 0.3 inches.
100			5			
105			4			
110			6			
115			6			

Depth	Visual %	Lith	Drilling Time Scale: min	Sample Type and Interval	Lithologic Description
				Cuttings (cont'd)	
115			6		
120			10		120'-145' Increase in average cutting size to 0.4 inches.
125			5		127'-137' Lost circulation.
130			8		
135			8		
140			8		140'-145' Lost circulation. 140'-150' Increase in average cutting size to 0.4 inches.
145			27		
150			4		150'-190' Decrease in average cutting size to approximately 0.1 inches.
155			5		
160			6		
165			6		
170			6		
175			30		
180			55		

Depth	Visual %	Lith	Drilling Time Scale: min	Sample Type and Interval	Lithologic Description
				Cuttings (cont'd)	
180			55		
185			35		
190			25		
195			18		
200			42		195'-250' Increase in volcanics in cuttings. Most of volcanic fraction is very dusky red (10 R 2/2) andesite. Indicates a lithology transition from alluvium to andesite.
205			9		
210			17		210' Foam changed color from brown to dark purple.
215			42		210' Andesite (Orejon): Very dusky red (10 R 2/2), wet; cuttings range in size from less than 0.1 inches to 0.2 inches, are angular and flaky to subrounded. This rock unit is an aphanitic to microporphyritic andesite. White calcite plagioclase (?) and green epidote are present as individual cuttings. Reddish brown iron oxide staining is present. Comments: The andesite is hard and penetration rates are slow. Small fractures are present according to bit behavior.
220			29		
225			30		210'-240' Cuttings are uniform flaky chips averaging 0.1 inch in size.
230			62		
235			50		
240			39		240'-245' Cuttings are very fine. less than 0.1 inch, like fine sand.
245			31		

Depth	Visual %	Lith	Drilling Time Scale: min	Sample Type and interval	Lithologic Description
				Cuttings (cont'd)	
215			31		245'-265' Increase in cutting size to 0.1 inches.
250			31		
255			36		
260			36		
265			37		265'-275' Decrease in cutting size to less than 0.1 inch. Samples are like find sand.
270			29		270'-275' Small amounts of green epidote in samples.
275			29		275'-296' Andesite cuttings are exhibiting more phencrrysts with depth from 275 -296'. Also more green epidote and grayish andesite is present with depth in this interval.
280			27		
285			27		
290			28		
295			30		296'-401' Cuttings are very fine (less than 0.1 inches) indicating a hard formation.
300			36		
305			35		
310			43		

Depth	Visual %	Lith	Drilling Time Scale: min	Sample Type and Interval	Lithologic Description
				Cuttings (cont'd)	
310			43		
315			31		
320			32		
325			43		
330			25		
335			31		
340			52		340'-360' Very slow drilling in this interval due to denser andesite bedrock. Cuttings are very fine (<0.1 inch).
345			53		
350			67		
355			76		
360			89		361'-T.D. Reduced drill time indicating softer andesite.
365			37		
370			35		
375			27		

Depth	Visual %	Lith	Drilling Time Scale: min	Sample Type and Interval		Lithologic Description
				Cuttings (cont'd)		
375			27			
380			32			
385			12		385'-401'	Significantly reduced drill times. Andesite cuttings contain pale green epidote.
390			14			
395			13			
400			17		401'	Total Depth
405						
410						
415						
420						
425						
430						
435						
440						

APPENDIX B

SLURRY WEIGHT AND VOLUME CALCULATIONS

For 5.6% Bentonite Grout

94 lb/sack x 90 sacks = 8460 lbs
Bentonite 50 lb/sack x 10 sacks = 500 lbs
Bentonite/Grout Mixture = 5.6%
if 4% bentonite grout = 105 lb/ft^3 (Halliburton Table)
6% bentonite grout = 101 lb/ft^3 (Halliburton Table)
then 5.6% bentonite grout = 101.8 or @ 102 lb/ft3 slurry wt.

Slurry volume is:

for 4% bentonite grout = 1.55 ft^3/sack (Halliburton Table)
for 6% bentonite grout = 1.73 ft^3/sack (Halliburton Table)
then 5.6% bentonite grout = 1.69 ft^3/sack
0.09 ft3/sack per percent change

To determine the maximum grout height to equal the collapse strength of Schedule 40 PVC pipe (158 psi):

$$\text{Maximum Column} = \frac{(\text{collapse strength})(144\ \text{in}^2/\text{ft}^2)}{\text{cement wt.}}$$

$$\text{Maximum Column} = \frac{(158\ \text{PSI})(144\ \text{in}^2/\text{ft}^2)}{(101.8\ \text{ft}^3)}$$

Maximum Column = 223.5 ft for 5.6% Bentonite Grout

Grout Calculations:

a) For 100-E-261

38 feet of annulus within the 10-inch surface casing needs to be filled.

$$V_t = \underset{(c)}{\pi r^2 h} - \underset{(w)}{\pi r^2 h}$$

where c = surface casing
w = well casing
h = column height
V_t = volume total

$$V_t = \pi(5/12)^2(38\ \text{ft}) - \pi(2.25/12)^2(38\ \text{ft})$$
$$V_t = (0.545\ \text{ft}^2)(38\ \text{ft}) - (0.110\ \text{ft}^2)(38\ \text{ft})$$
$$V_t = 16.5\ \text{ft}^3$$

for 5.6% bentonite grout, the # of sacks required

$$16.5\ ft^3 \times \frac{1\ \text{sack}}{1.69\ ft^3} = 9.8 \approx 10\ \text{bags}$$

Given 90 bags were loaded, then 80 bags remained in the cement truck after pouring grout to the surface in 100-E-261.

b) For 100-B

Given 80 bags of 5.6% bentonite grout was available for well 100-B and the estimate that 80% of the grout was placed into the well, then 64 sacks or 108 ft^3 could have been placed in the well.

PRE-FAILURE GROUT **HEIGHT** IN 100-B

1. PVC Bridge in well casing

Grout height max = 145' bls

Maximum Column = 298.5' - 145' = 153.5' post-failure

Assuming a bridge occurred at 200 bls, the pre-failure grout level was:

Volume (Annulus to 200 feet)	+	V (open hole) to 145'	=	V Total

a) Volume (annulus to 200 ft) = V_a

$$\pi r^2 h_{(b)} - \pi r^2 h_{(w)} = V_a$$

$$\pi(5/12)^2(98.5\ ft) - \pi(2.25/12)^2(98.5\ ft) = V_a$$

$$V_a = 53.7\ ft^3 - 10.8\ ft^3$$

$$V_a = 42.9\ ft^3$$

b) Volume (Open hole) = V_{op}

$$V_{op} = \pi r^2 h_{(b)} = (0.545\ ft^2)(55\ ft)$$

$$V_{op} = 30\ ft^3$$

c) Total volume (V_t) = $42.9\ ft^3 + 30\ ft^3 = 72.9\ ft^3$

$$72.9\ ft^3 \times \frac{1\ ft(ann)}{.434\ ft3} = 168\ feet$$

where $0.434\ ft^3$ = volume of 1 foot of well annulus

168' - 14' (distance from top of completion zone to bottom of PVC) = Total column height above base of PVC

= 154' = 31% safety factor for collapse strength of PVC at 284' bls.

$72.9\ ft^3/108\ ft^3$ = 32% invasion/borehole irregularity loss.

2. <u>Grout fills entire well casing below 200' bls</u>

$$V_T = \underset{(b)}{\overset{(a)}{\pi r^2 h}} + \underset{(w)}{\overset{(b)}{V}} - \underset{(wc)}{\overset{(c)}{V}} + \underset{(an)}{\overset{(d)}{V}}$$

where: b = borehole radius
w = well radius
wc = well casing
an = annulus

for a)

$V_{(b)} = \pi r^2 h$ where: h = height from 200' (top of casing) to 145' bls (top of measured grout)

$V_{(b)} = \pi(5/12)^2(55\ ft) = 30\ ft^3$

for b)

$V_{(w)}$ = Volume of grout in well casing from 200' to well TD (390')

$V_{(w)} = \pi r_{(i.c.)}^2 h$ where: i.c. = Inner casing diameter
h = 190 feet

$V_{(w)} = \pi(2/12)^2(190') = 16.6\ ft^3$

for c)

$V_{(wc)}$ = Volume taken by solid well casing wall above the top of gravel pack.

$V_{(wc)} = \pi r_{(o.c.)}^2 h - \pi r_{(i.c.)}^2 h$ where: o.c. = outer casing
i.c. = inner casing diameter
h = height from top of gravel pack to 200'

$V_{(wc)} = \pi(2.25/12)^2(98.5\ ft) - \pi(2/12)^2(98.5\ ft)$

$V_{(wc)} = 10.8\ ft^3 - 8.6\ ft^3 = 2.2\ ft^3$

for d)

$V_{(ann)} = \pi r_{(b)}^2 h - \pi r_{(w)}^2 h$ h = 298.5 - 200 = 98.5

$V_{(ann)} = \pi(5/12)^2(98.5\ ft) - \pi(2.25/12)^2(98.5\ ft)$

$V_{(ann)} = 53.7\ ft^3 - 10.8\ ft^3$

$V_{(ann)} = 42.9\ ft^3$

so

V_t = 30 ft^3 t 16.6 ft^3 - 2.2 ft^3 t 42.9 ft^3

V_t = 87.3 ft^3

87.3 ft^3 x 1 ft/.434 ft^3 = 201 ft column from top of completion zone

Subtract 14 feet to reach base of PVC pipe

201' - 14' = 187' or 16% safety factor for collapse of PVC at 284 feet bls

Borehole irregularity/invasion loss:

87.3 ft^3/108 ft^3 = 19%

PV' PLASTIC PRODU(S

- Sonic welded wires and rods produce a high-strength PVC screen with continuous slots.
- More open area per given slot size than any other non-metallic screen available.
- Resists corrosion from salts and gases commonty found in either fresh or salt waters.
- The onty continuous slot non-metallic screen available without a restricting pipe base.
- Coarse threads reduce make up time and lessen chances of cross-threading.
- Chemically inert O-ring produces tight, leak-proof joints.
- Thermally attached fittings avoid need for field solvent welding which can jeopardize sample accuracy.
- PVC product threads are compatible with stainless steel product threads.
- Stainess steel locking cap can be used with PVC casing.
- Screen and casing individually wrapped for sanitary protection during shipment. Special cleaning procedures are used on each piece prior to packaging.

SCREENS

SCREEN SIZE	DIAMETER (IN.)		SHIP WT (LB/FT)	OPEN AREA	
	O.D.	I.D.		10-SLOT (.010")	20-SLOT (.020")
Q INCH	9.375	1.875	0.8	6.8	19.8
4 INCH	4.620	4.000	1.7	11.9	9Q.Q
5 INCH	5.563	4.810	Q.5	13.1	94.7
6 INCH	6.695	5.690	3.2	13.2	25.0

CASING

CASING SIZE	CASING O.D. (IN.)	FITTING I.D. (IN.)	SHIP WT (LB/FT)
Q INCH	Q.375	9.067	0.7
4 INCH	4.500	4.026	2.0
5 INCH	5.563	5.033	2.7
6 INCH	6.695	5.993	3.5

- 2 and 4 inch casing are Schedule 40; 5 and 6 inch sizes are SDR21.
- All casing *meets* ASTM F480-81 specifications.

MATERIALS STRENGTH DATA

NOMINAL SIP	O.D. (IN.)	I.D. (IN.)	WT	STRENGTH			
				COLLAPSE (PSI)	TENSILE (LB)	COLUMN (LB)[1]	JOINT TENSILE (LB)
2" xhed. 40 casing	9.375	9.067	.64	307	7,500	90	1,800
2" sched. 80 casing	8.375	1.939	.88	947	9,875	195	1,800
2" wire wound screen	9.375	1.875	.8	99	1,800	25	1,800
4" xhed. 40 casing	4.500	4.026	1.9	158	22,200	1,030	6,050
4" sched. 80 casing	4.500	3.826	2.6	494	30,850	1,375	6,050
4" wire wound screen	4.620	4.000	1.7	79	2,250	150	6,050
5" sdr-21 casing	5.563	5.033	2.8	110	30,870	2,200	6,050
5" sched. 80 casing	5.563	4.813	3.9	324	42,780	2,940	6,050
5" wire wound screen	5.560	4.810	2.5	79	4,610	307	6,050
6" sdr-21 casing	6.625	5.993	4.0	110	43,840	4,440	4,000
6" xhed. 80 casing	6.625	5.761	5.4	292	58,830	5,760	4,000
6" wire wound screen	6.620	5.680	3.7	87	5,770	554	4,000

1. For all column calculations: span = 20 ft, hinged one end, fixed other end.
2. For PVC, Y_p = 7,000psi, E = 415,000psi, μ = .5.

ENG.

PORTLAND CEMENT — CLASS A OR B WITH BENTONITE

SLURRY PROPERTIES

Per Cent Bentonite	Maximum Water Requirements Gal./Sk.	Cu. Ft./Sk.	Slurry Weight Lbs./Gal.	Lbs./Cu. Ft.	Slurry Volume Cu. Ft./Sk.
0	5.2	0.70	15.6	117	1.18
2	6.5	0.87	14.7	110	1.36
4	7.8	1.04	14.1	105	1.55
6	9.1	1.22	13.5	101	1.73
8*	10.4	1.39	13.1	98	1.92

THICKENING TIME — HOURS:MINUTES

(Pressure-Temperature Thickening-Time Test)

Per Cent Bentonite	API CASING TESTS 4,000′	6,000′	8,000′	API SQUEEZE TESTS 2,000′	4,000′	6,000′
0	3:00+	2:25	1:40	2:14	1:32	1:01
2	2:25	1:48	1:34	2:25	1:29	0:56
4	2:34	1:57	1:32	2:26	1:18	0:58
6	2:35	1:45	1:22	2:16	1:26	0:56
8*	2:44	1:50	1:24	2:31	1:28	0:58

COMPRESSIVE STRENGTHS — PSI

Atmospheric Pressure

Per Cent Bentonite	60°F.	80°F.	100°F.	120°F.
		12 HOURS		
0	80	580	1035	1905
2	55	455	635	1280
4	20	220	375	780
6	15	85	245	500
8*	15	50	155	310
		24 HOURS		
	615	1905	2610	3595
	385	1090	1520	2040
	225	750	1015	1380
	85	380	730	825
8*	60	265	510	610
		72 HOURS		
0	2050	4125	6150	6650
2	1185	2340	3350	4110
4	960	1775	2430	2800
6	615	1170	1610	1710
8*	425	720	1045	1215

*For bentonite concentrations greater than 8 per cent, see modified cement data.